Parkland Elements and Details
Signage

Parkland Elements Design Manual

Section

3.4

Revision B : Draft December 2007

Contents

3.4 Signage

Introduction

This Section of the Parklands Elements and Details Manual describes the signage system to be implemented throughout all of the Sydney Olympic Parklands sites. The aim of the signage system is to direct, inform and regulate all user groups and to promote the identity of Sydney Olympic Park by establishing a consistent image throughout the site.

This section of the Manual is designed to be used by Sydney Olympic Park Authority personnel to specify signs for the Parklands as they are needed.

It includes the following:

- an overview of the sign types
- specifications for the construction of the sign structures and the application of the graphics onto those structures
- examples of a sign schedule and a sign location plan to be used when planning signs for a particular site.

3.4.1 Sign types

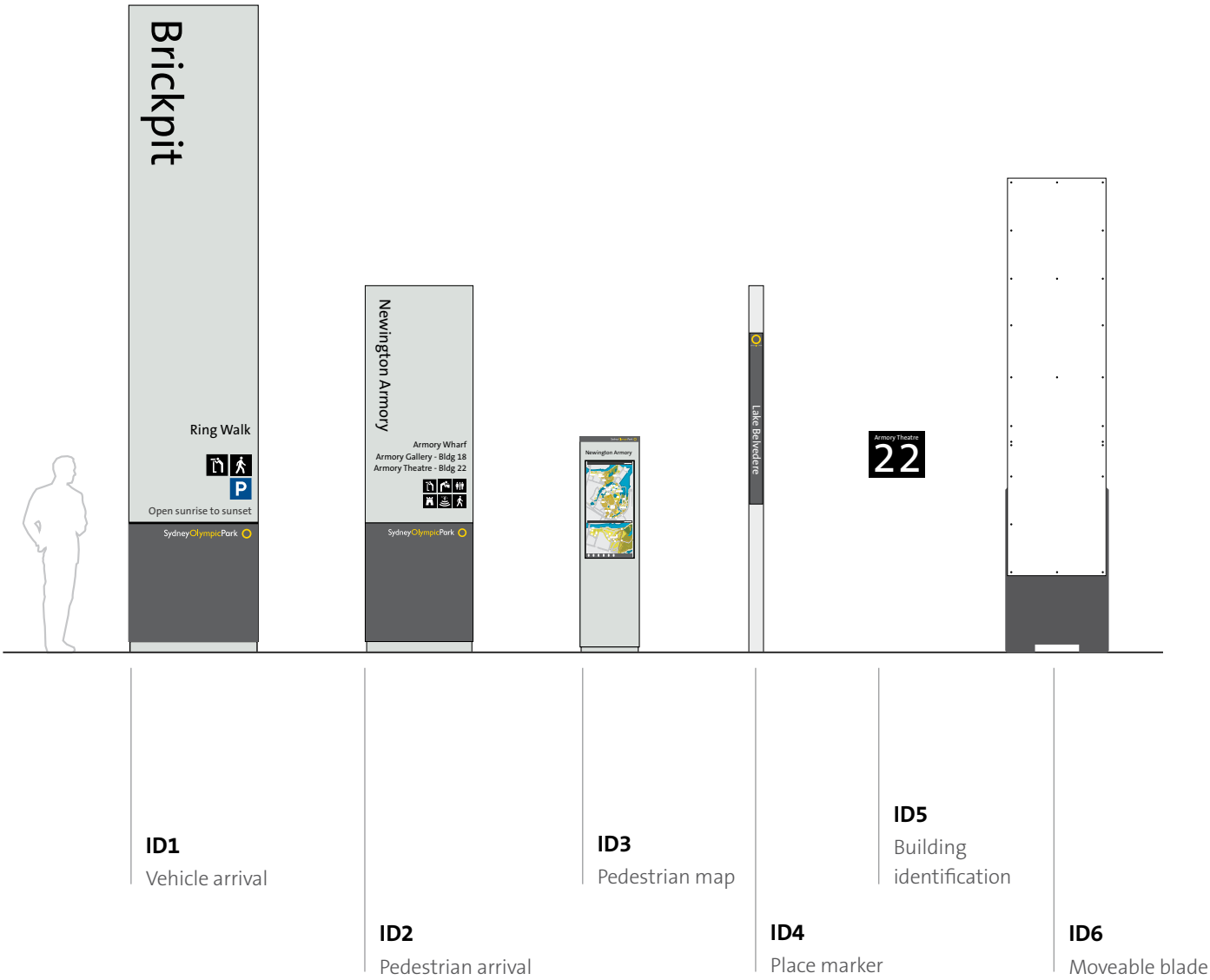

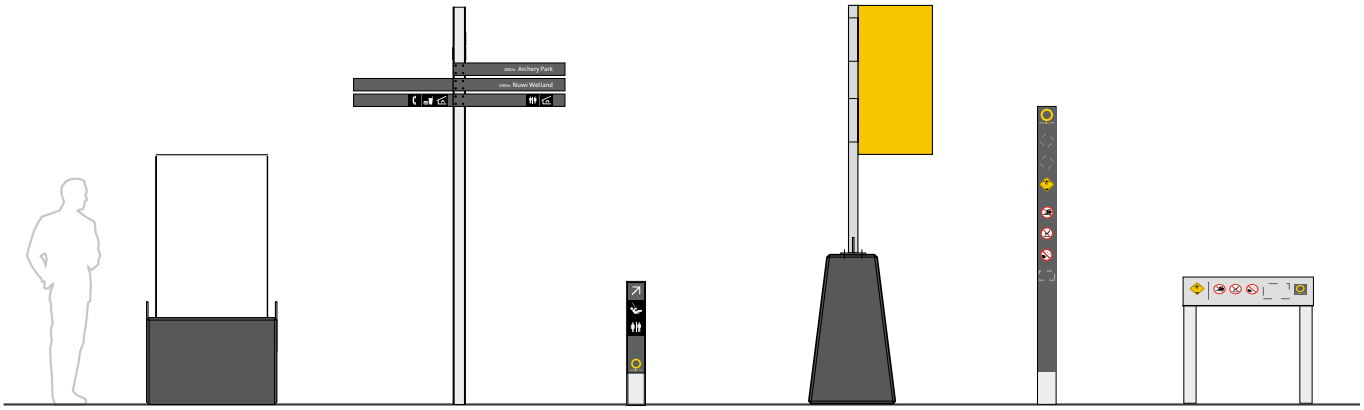
ID7
Moveable map/ information
DR1
Directional finger
DR2
Regulatory post
DR3
Moveable directional flag
IF1
Regulatory post
IF2
Regulatory sign

3.4.2 Sign Specifications

1.0 SCOPE OF WORK

The subcontractor is to supply and install all signs as shown in the following documents:

• Sign Type Drawings

• Sign Location Plans

• Sign Schedule

This specification is to be read in conjunction with these documents.

The subcontractor shall verify and be responsible for all dimensions and conditions on the job prior to manufacture, including structural, engineering and footing details and the strength and suitability of materials specified for each sign. The subcontractor shall notify the principal of any variations from the dimensions and conditions shown by these and any subsequent drawings. If changes are requested they should be submitted as drawings for approval prior to production.

1.1 Related Work

• includes repainting or refurbishing existing panelling, ground surfaces, wall surfaces or electrical fittings where damaged by the subcontractor during the construction or installation of a sign.

• includes the construction of supports, frames, brackets or mouldings all associated work to support, build and install the signs in given locations.

1.2 Format of Pricing

Prices are to be provided for supply & installation as a lump sum total and itemised per sign type to allow for additions and deletions if required.

Submitting a Quote indicates the acceptance to produce the signs to the Quality Standards as in accordance with the PEDM.

1.3 Production Program

The Subcontractor must submit with their price a written program detailing the time frame required for manufacture and installation.

1.4 Standards

All work and materials shall comply with the Building Code of Australia, the Workplace Health and Safety Act, and, except where otherwise noted in this Specification, comply with the latest editions of all relevant Australian codes or standards (current issue) of which the following is a selected list:

Quality Management

AS/NZS ISO 9001	Quality systems for design/ development, production, installation and servicing
AS1170.0	Structural Design Actions - General Principles
AS 1170.2-2002	Minimum design loads on structures – wind loads Metalwork
AS4100	Steel Structures Code
AS 3678	Structural steel – hot-rolled plates, floor-plates and slabs
AS 1397	Steel sheet and strip – hot-dipped zinc-coated or aluminium/zinc-coated
AS 1444	Wrought alloy steels – standard and harden ability (H) series

AS 1449	Wrought alloy steels – stainless and hear-resisting steel plate, sheet and strip
AS 1554	Structural steel welding
AS 1627	Metal finishing – preparation and pre-treatment of surfaces
	Part 1 – cleaning using liquid solvents and alkaline solutions
	Part 2 – power tool cleaning
	Part 4 – abrasive blast cleaning
	Part 7 – hand tool cleaning of metal surfaces
	Part 9 – pictorial surface preparation standards for painting steel surfaces
AS/NZS 4680	Hot-dip galvanised (zinc) coatings on fabricated ferrous articles
AS 1734	Aluminium and aluminium alloys, flat sheet, coiled sheet and plate Concrete
AS3600	Concrete Structures Code
AS 3610	Formwork for Concrete Fasteners
AS 1214	Hot dip galvanised coatings on threaded fasteners
AS 1420	ISO metric hexagon socket head cap screws
AS 1421	ISO metric hexagon socket set screws
AS 1427	ISO metric machine screws Sealants
AS 1527	Two-part polysulphide based sealing compounds for the building industry
AS 001543a	Sealing compound silicone rubber base (US specification) Paints and coatings
AS 1231	Aluminium and aluminium alloys – anodised coatings for architectural applications
AS 2039	Methods for testing anodic oxidation coatings on aluminium and aluminium alloys
AS 2310	Glossary of paint and painting terms
AS 2312	Guide to the protection of iron and steel against exterior atmospheric corrosion
AS 2700	Colour standards for general purposes
ASTM 03363	Test method for film hardness by pencil Design for Access and Mobility
AS 1428.1	General requirements for access - New building work
AS 1428.2	Enhanced and additional requirements - Buildings and facilities
AS 1428.3	Requirements for children and adolescents with physical disabilities
AS 1428.4	Tactile indicators

2.0 MATERIALS

Generally: Unless otherwise specified, comply with the following where applicable.

Alloy/temper to AS1865 (Aluminium) (not for photo anodising)

Anodising to AS1231, coating thickness not less than 25 microns.

Properties: Allow for expansion/contraction of materials.

Electrolysis: Provide insulation between dissimilar metals to prevent electrolysis.

Materials shall be generally as follows:
In conformity with the current applicable Australian Standard Code. All materials shall be new, the best of their respective kind and suitable for their purposes. Materials are to be free from corrosion, prime painted and compatible with the final finish, where applicable. Provide all screws, bolts, rivets, pop rivets, plain and countersunk fastenings and washers of a type and material suitable, sufficient and matching in finish and appearance to the components fastened.

2.1 Concrete

Concrete for footings shall be of structural quality and free of defect and constructed to Australian Standard Codes for Concrete Reinforcement and Form work. Neat & uniform surrounds where visible.

2.2 Aluminium

Aluminium sheet & extruded sections where specified to be used. Single full sheets are to be used for each sign face, there are to be no joints in sheet unless otherwise shown on drawings.

2.3 Mild Steel

All mild steel work to be hot dipped galvanised. Single full sheets are to be used for each sign face, there are to be no joints in sheet unless otherwise shown on drawings.

2.4 Paint

Paint to be 2 pack Polyurethane and applied as per manufacturers instructions. Primers and undercoats to be applied prior to the final coatings. The final coat to be satin finish (20 to 50 degree gloss level). Dupont 'Tedlar' SP polyvinyl fluoride film laminated over the graphics.

2.5 Adhesives

Adhesives must be suitable for their application and applied as per manufacturers instructions.

Double sided adhesive tape is to be 3M brand 4016 or equal.

Silicon adhesive is to be acid free Dow Corning 7932 or equal.

2.6 Photo Anodising

All photo anodised panels are to conform to the following requirements,

- 25 microns minimum
- Full colour image
- UV resistant inks
- Minimum 300dpi resolution
- Images to have a minimum 5 year outdoor life

2.7 Protective Anti-Graffiti

All painted faces shall have a final clear coat applied over the face to protect from graffiti. The clear coat shall be consistent with the paint finish and applied as per manufacturers instructions. The final coating over paint to be Reliance Anti-Graffiti Shield (sacrificial wax polymer) from The Graffiti Specialists (or equal).

2.8 Fixings

All fixings are to be stainless steel grade 316 with anti-theft heads as shown on drawings. Tek-screw type fixings are not permitted where visible.

2.9 Material Finishes

All materials subject to corrosion shall be suitably primed or otherwise treated with permanent protection. Undercoats shall be evenly applied to concealed frames and supports prior to assembly. Non corrosive materials are to be preferred in all cases.

3.0 CONSTRUCTION

Generally - Form graphics items accurately to the specified shapes and surfaces with clean, well defined edges or arises, free from blemishes. The subcontractor shall be responsible for the quality of all materials and workmanship required to manufacture the signs including the materials and workmanship of any firms or individuals who act on behalf of the subcontractor and/or suppliers.

3.1 Construction Standards

Construction is to be of the highest of industry standards. Where connection or suspensions are made, plates, bolts, angles and screws are to be concealed as much as possible from view unless otherwise detailed. Box frames or tube shall be extruded and prefinished. Spaces, drilled holes and fixings shall be consistent from one sign to another. Screws, adhesives and silicones shall be concealed and or made flush with the surface. Fit components with care. Graphic standards are to be carefully adhered to.

3.2 Structural Support

Structural support of signs shall be independent of the existing structure except where specifically fixed to walls, floors or ceilings. For all signs, the subcontractor is to be responsible for strength and suitability of the structural support and connection of all signs. Where visible plinths are shown on the sign drawings, match details as shown. Internal structure may be amended to suit relevant structural requirements.

3.3 Shop Drawings

Requirement
The subcontractor shall submit shops drawings of all sign types for review prior to manufacture.

Inclusions

Drawings shall include the following details and information where applicable:

1. Large scale (full size if practical) lettering layouts/spacing templates. 1:5 minimum.
2. Sections and Details of proposed fabrication.
3. Anchorages and Fixings, locations and types.
4. Engineer's Certification on all structural work. Design wind loading appropriate for the site.
5. Type faces, Colours and Finishes.

All proposed changes to the construction of the signs must be submitted and approved by SOPA prior to construction commencing.

3.4 Graphics

Sign messages are to be created from electronic artwork to faithfully reproduce the shapes and typefaces specified. The graphic layouts shall follow the guidelines outlined in the Sign Type Drawings.

Where noted in the tender drawings, SOPA will provide only the graphics shown on the Sign Type Drawings as PDF.

It is the responsibility of the sign maker to ensure that all electronic files are accurately converted and match the Sign Type Drawings provided in form, size & colour. Hard copy drawings provided are to be used as the primary reference.

If the subcontractor finds any text messages or graphics in the Sign Type Drawings that do not fit the guidelines, the subcontractor shall prepare a layout of the message at a minimum 1:10 scale and submit the layout for approval prior to production.

3.5 Painting

All signs shall be factory painted using sprayed finishes or other approved finishes. Surfaces to be satin finish (20 to 50 degree gloss level), with full and even cover. Where screws bolts or both are applied to prefinished material, retouch to match.

3.6 Vinyl Graphics

Cut from self adhesive vinyl by computer operated flat bed knife cutter or other accurate technique.

3.7 Screen Printing

Where noted on the drawings, graphics are to be accurately screen printed using silk screens and two pack paints.

3.8 Clear Protection Coating over Painted Sign Faces

All painted faces shall have a final clear coat applied over the face to protect from graffiti. The clear coat shall be consistent with the paint finish and applied as per manufacturers instructions. The final coating over paint to be Reliance Anti-Graffiti Shield (sacrificial wax polymer) from The Graffiti Specialists (or equal).

3.9 Cut out Shapes

Cut out shapes must be accurately pantographed or laser cut from solid material and hand finished as necessary.

3.10 Welding

All welding and welding equipment shall satisfy the requirement of the appropriate standards for the specified material and conform to SAA code. All visible welds to be neat, ground back and polished.

3.11 Warranty

The signs shall not show deterioration, fading, crazing, peeling or bond failure for a period not less than (5) years from the date of completion.

4.0 ILLUMINATION

Generally: Achieve optimum illumination on all illuminated signs.

4.1 Flood Lighting

Flood lights to have external aluminium housing and toughened glass lens with tungsten halogen lamp and installed with all required electrical components to match relevant Australian Standards. SOPA to advise further.

5.0 GRAPHIC STANDARDS

The following rules of graphic quality apply:

1. All lettering shall be true to its letter form in face weight and construction.
2. All graphics are to be electronically, photographically or mechanically reproduced.
3. All colours are as specified in Pantone colour reference system or other specified colour.

5.1 Typeface

The font family shown on the sign type drawings is to be used for all messages, text and numerals except where specifically stated otherwise. No other versions of typefaces will be accepted. It is the responsibility of the sign maker to purchase the font as specified.

5.2 Pictograms and Arrows

Only the symbols as shown on the sign type drawings are to be used. No other versions will be accepted.

5.3 Colours

Colours for all parts and faces are as noted on the drawings. All colours to be approved via the sampling process as noted in section 6.

6.0 SAMPLES & PROTOTYPES

Samples must be submitted to SOPA or the Managing Contractor for approval prior to the production of any signs. The subcontractor shall submit samples of the following:

- minimum 400 x 400mm panel of each spray painted colour and finish
- multiple samples of digital prints showing various sections of the graphics including areas of full single colour, multiple colour areas, text, pictograms and gradients.
- samples of welded joins (prior to galvanising)
- samples of galvanised panels and Universal Columns (easily transportable size please).

7.0 INSTALLATION STANDARDS

Site Conditions
Site inspections are to be carried out prior to installation to verify locations, confirm all architectural details, mounting conditions and dimensions (refer to Section 1.0 Scope of Work).

General
All installations to be plumb and level, at the heights indicated, securely mounted with theft-resistant fixings. Locate all signs in the correct position and orientation as indicated on Sign Location Plans.

Work shall be complete with all bolts, rivets and other fittings to adequately transmit the loads and stresses imposed. Where bolting of metal work to concrete is specified, fixings to be of approved masonry anchors of the required size. Proper edge clearances should be observed so there is no risk of possible damage to concrete or structural framing. Packing of fixings is permitted to approved tolerances to level and square installations.

7.1 Inspections

Subcontractor's engineer to site inspect and certify all footings prior to pouring of concrete & issue a certificate of inspection.

The signs are to be inspected and approved by SOPA in the factory prior to installation.

7.2 Electrical Installation - Flood-Light Sign

The entire installation shall be carried out in accordance with AS3000 & AS3100. The subcontractor shall supply and install all electrical fittings associated with the signs.

The Subcontractor shall connect each flood light to power supply provided to within two metres of the sign's flod lights locations.

All necessary signs concerning danger to the public must be provided. Control gear and transformers shall be installed in approved locations that are accessible for maintenance, and out of view wherever possible. Suitable enclosures with adequate ventilation shall be provided.

All flood lights to be hard wired. Wiring shall have voltage and temperature rating to suit the application. All wiring shall be concealed to approval, enclosed in conduit in approved locations only. All wiring shall be able to be removed and replaced if necessary. Provide cable access notes as necessary to achieve this. Where necessary to prevent the ingress of water, seal cable entries in an approved manner.

8.0 MAINTENANCE MANUAL

The Subcontractor is to provide three copies of a maintenance manual containing a description of the supplied items, instructions on how to correctly replace panels or parts as required and details on cleaning and maintenance of the signs.

The Subcontractor is to provide a comprehensive maintenance manual. 2 copies of this manual is to be provided hardbound and an electronic version (PDF format) to be provided on CD Rom. This manual is to contain all information for every aspect of the project and shall include, but not limited to:

• All working and as-built drawings for all aspects of the works, ie footing details, artwork, individual sign design, bolt cage assemblies, glazing and other details, thus enabling any component to be easily remanufactured if and when required;

• Comprehensive parts list;

• Subcontractors and suppliers contact list detailing all works performed and materials supplied, for example installation and footing contractor, metal, glass, paint, adhesive, sealant, vinyl, glazing and fixing suppliers;

• All associated certification documents;

• Sign Installation and removal details;

• Artwork and glass panel replacement instructions;

• All digital photos of the project;

• Replacement procedures for each individual section or replaceable panel of the signage system;

• Cleaning and maintenance instructions;

• Graffiti removal instructions;

• Spare parts list to enable a quick reordering of components including supply time frames.

3.4.3 Graphic reference

Typeface

The Sans Plain

ABCDEFGHIJ
KLMNOPQR
STUVWXYZ
abcdefghi
jklmnopqr
stuvwxyz
1234567890

Directional

Arrows

← ↖ ↑ ↗ →

Pictograms

Walking Path (PW)

Pictogram codes eg Walking Path (PW)

The code (PW) is used in the sign schedule to identify which pictogrtam are to be used or which sign.

Colour reference

Dulux Western Myall PG1•F7	Pantone 116C	Black	White	Pantone 653C	Pantone Red 032C	Pantone 371C

SOPA Logo zones

For alignment on sign panels

3.4.4 Construction notes

General Construction Notes

GENERAL

Hot dip galvanise all steel.

DESIGN LOADING

Region A
Basic wind velocity = 41m/s
Terrain Category = 3
Ms = 0.95
Mi = 1.0
Mt = 1.1
Horizontal Load 1.5kN applied at 1000 above G.L.

The subcontractor is responsible for the structural adequacy of the signs and their footings.

WELDS and BOLTS

Fully weld all connections with 6mm continuous fillet welds unless noted otherwise. All welds to be grade SP unless noted otherwise.

CONCRETE

Strength grade = N32
Aggregate size = 20mm
Slump = 60mm
75 cover to bolts or reinforcement. Vibrate concrete.
Lap mesh 2 cross wires + 25mm minimum.

FOUNDATION MATERIAL

Footing designed to found in natural material having an allowable bearing capacity of 100kPa. Install mass concrete under footings down to an adequate material as required.

Fixing to slab - ID3 only:

Min slab thickness = 100mm.
Minimum extent of sound slab free of joints and cracks = 1500 x 1500mm.
Concrete strength assumed = 32 MPa.
Minimum distance from anchor to slab edge/joint = 300mm.
Fix to slab via M12 dynasets (50mm embedment)

It is the subcontractor's responsibility to determine the bearing capacity of the foundation material.

3.4.5h Identification sign: DR1 - Directional Finger Sign

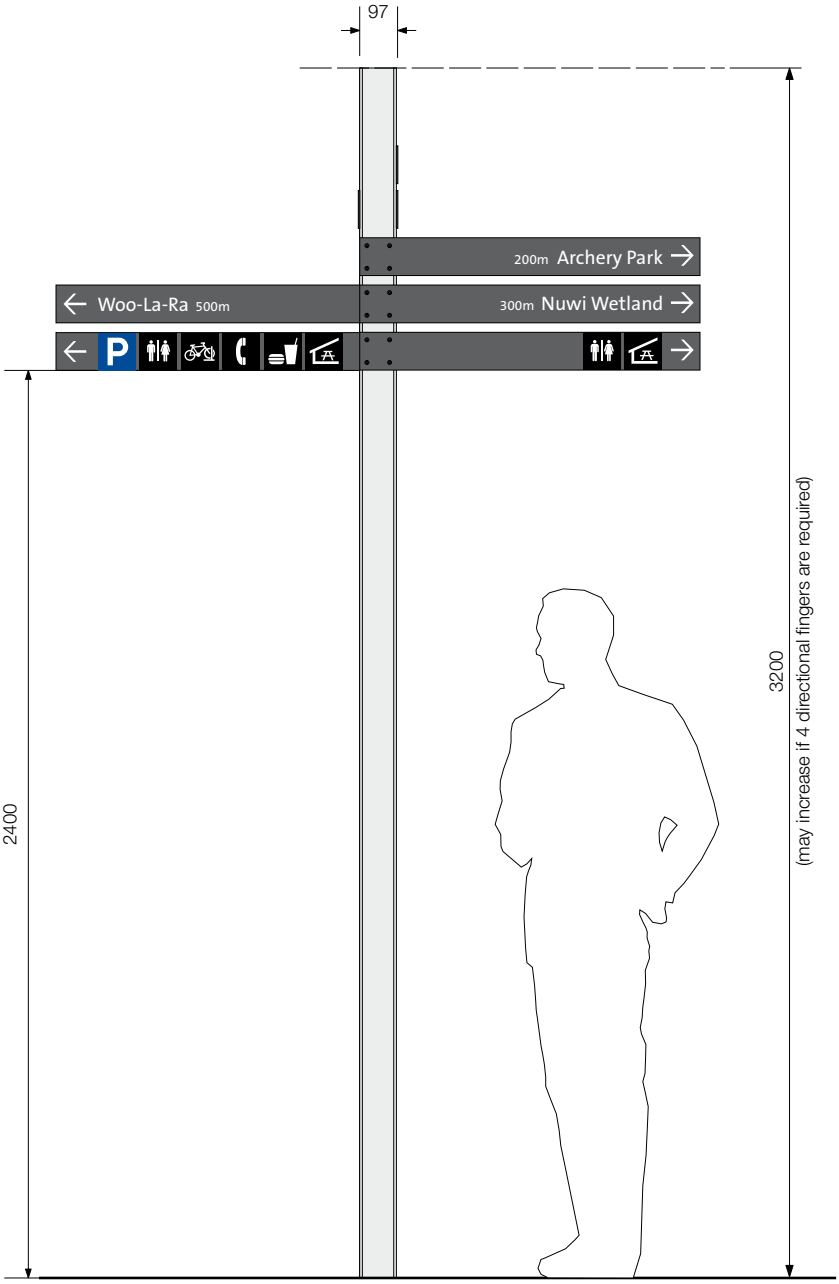

FRONT VIEW

Messages and pictograms shown are indicative only.

Elevations

Scale 1:20

Principle	Section 3.4 Signage	
Grapfic details: directional finger sign	Revision: Draft	DESIGN INTENT ONLY DR1

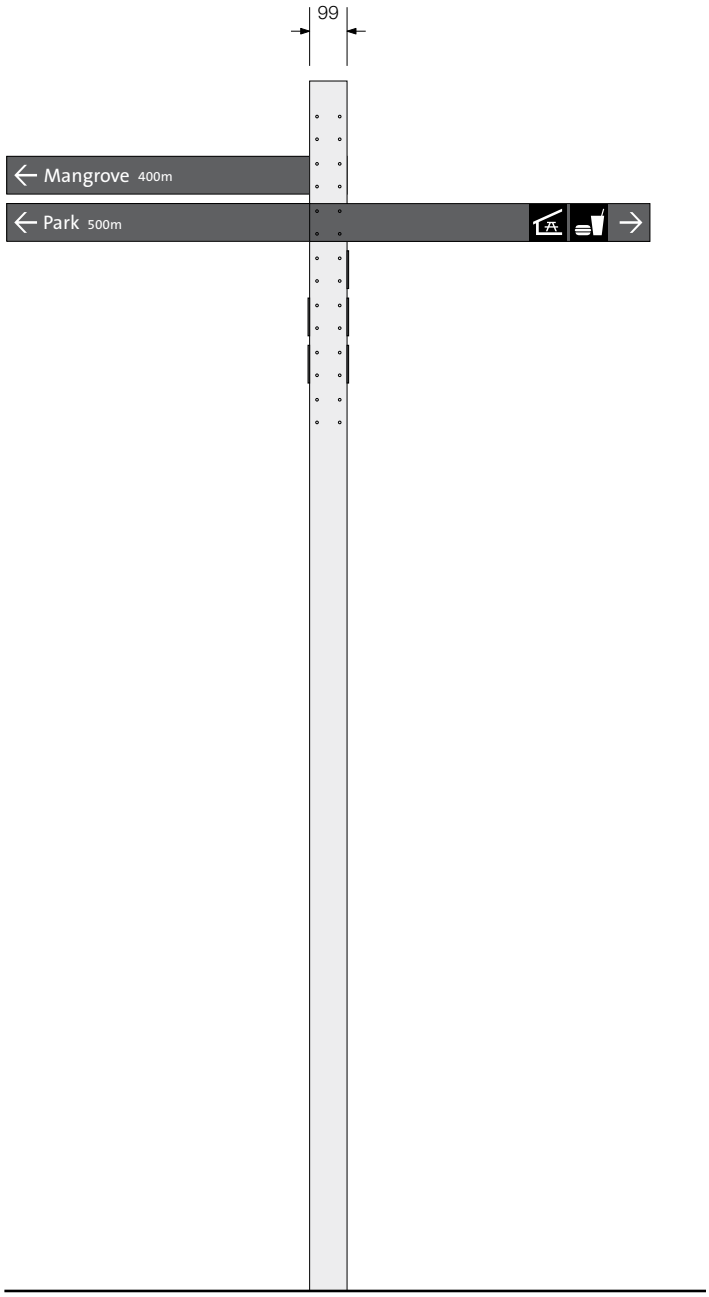

SIDE VIEW

Elevations

Scale 1:20

Principle	Section 3.4 Signage
Grapfic details: directional finger sign	Revision: Draft

DESIGN INTENT ONLY

DR1

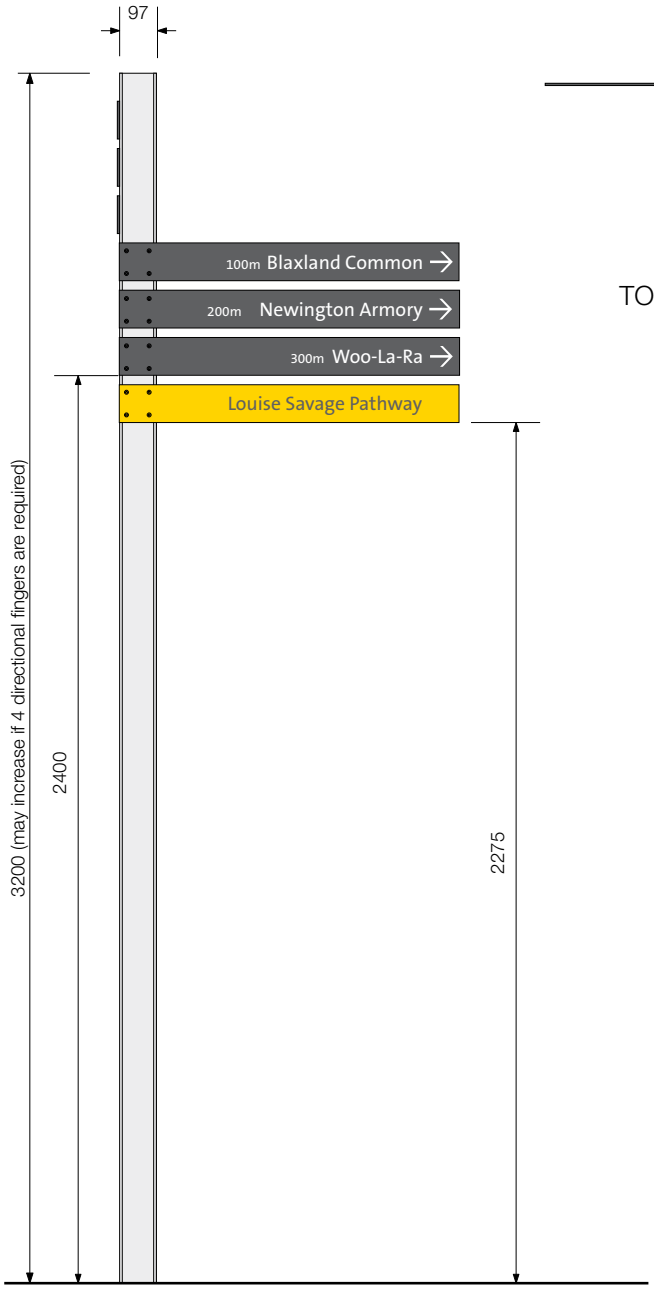

FRONT VIEW

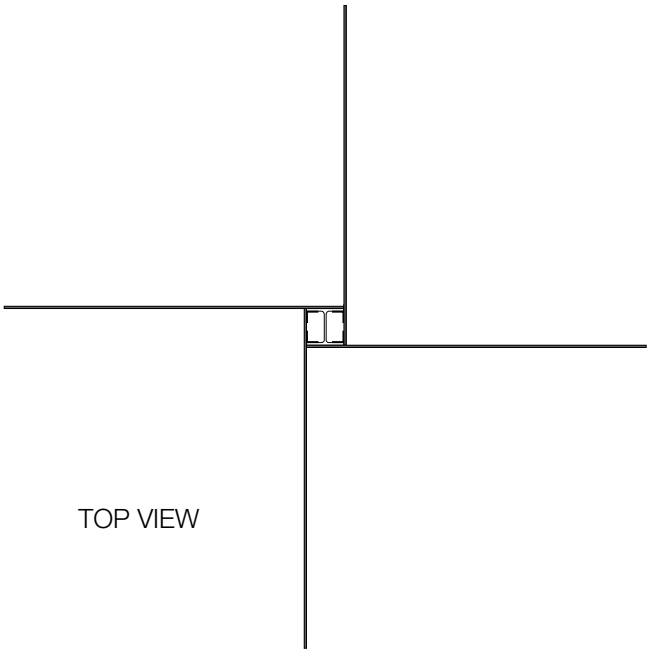

TOP VIEW

Elevation - Pathway Naming Slat

Scale 1:20

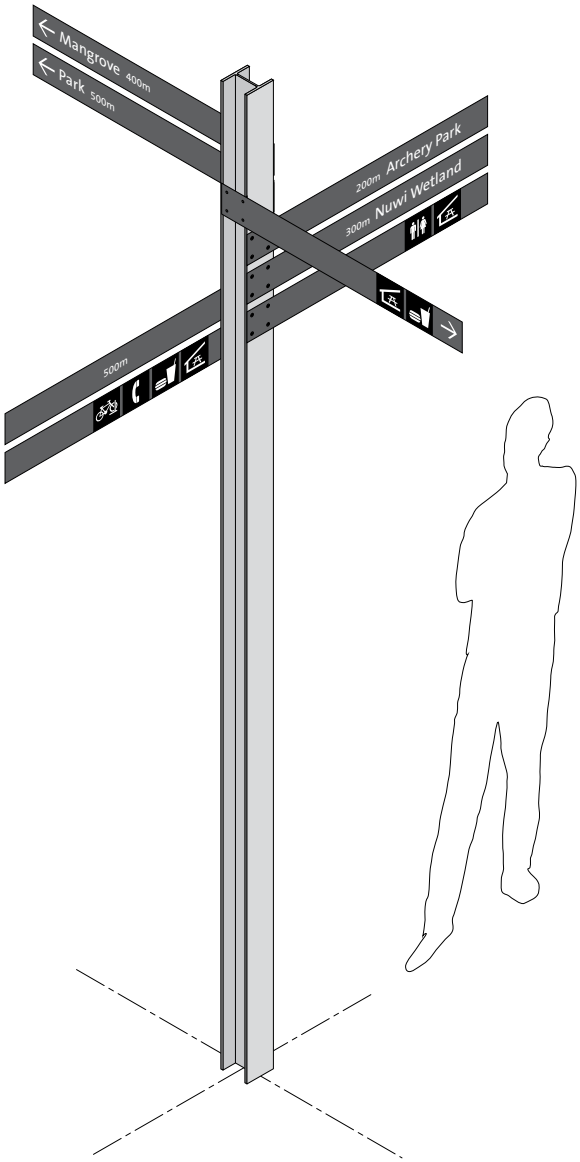

ISOMETRIC

Principle	Section 3.4 Signage
Grapfic details: directional finger sign	Revision: Draft

DESIGN INTENT ONLY

DR1

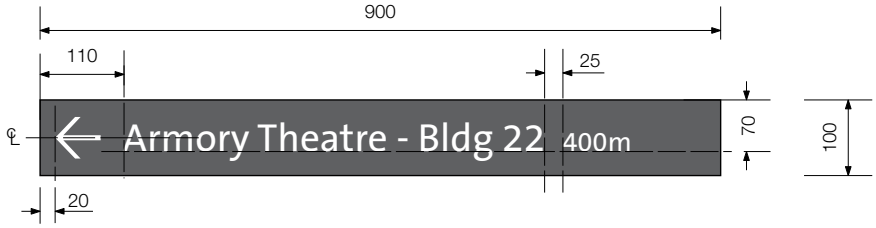

SIDE 1 - Destination Slat

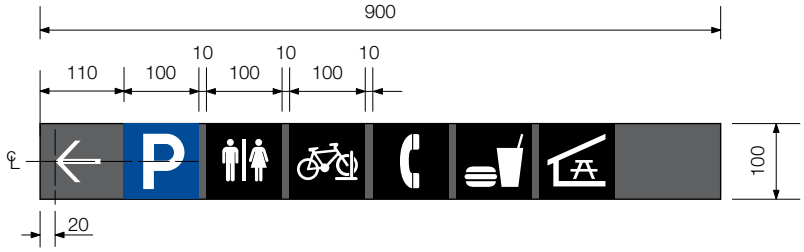

SIDE 1 - Pictogram Slat

Maximum 6 pictograms per slat

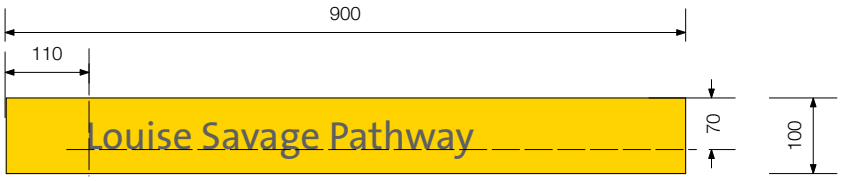

SIDE 1 - Pathway Name Slat

Graphic Details

FONT
The Sans Plain

SIZE
Text (Destination and Pathway names) = 35mm cap X height

Text (Distances) = 25mm cap X height

Pictograms = 100 x 100mm

COLOUR
Panel Background = To match Dulux Western Myall

Panel Background (Pathway name only) = Pantone 116C

Text = White

Text (Pathway name only) = To match Dulux Western Myall

Pictograms = Black and White

Parking and Access pictograms = White and Pantone 653

Graphic Layouts

Scale 1:10

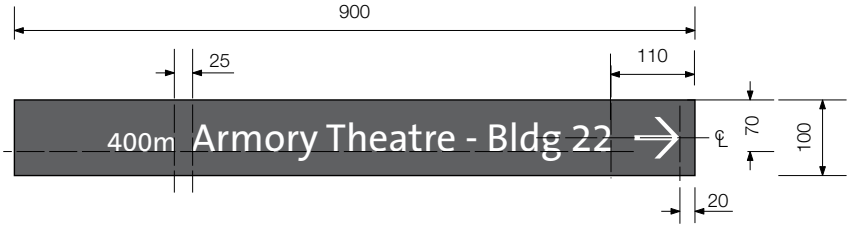

SIDE 2 - Destination Slat

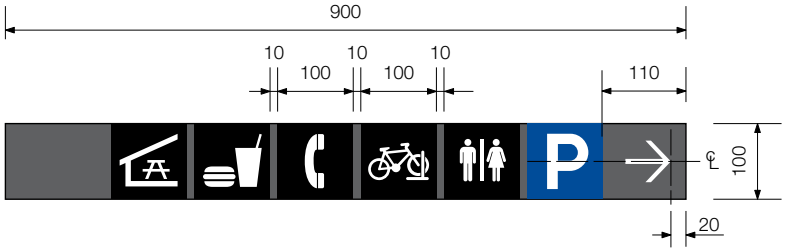

SIDE 2 - Pictogram Slat

Maximum 6 pictograms per slat

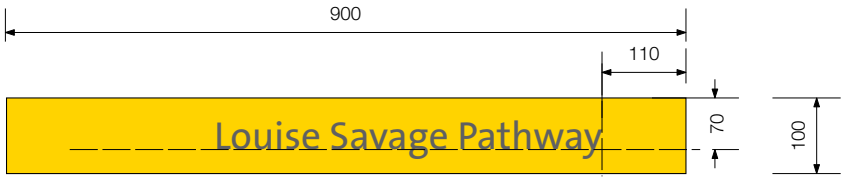

SIDE 2 - Pathway Name Slat

Graphic Details

FONT
The Sans Plain

SIZE
Text (Destination and Pathway names) = 35mm cap X height

Text (Distances) = 25mm cap X height

Pictograms = 100 x 100mm

COLOUR
Panel Background = To match Dulux Western Myall

Panel Background (Pathway name only) = Pantone 116C

Text = White

Text (Pathway name only) = To match Dulux Western Myall

Pictograms = Black and White

Parking and Access pictograms = White and Pantone 653

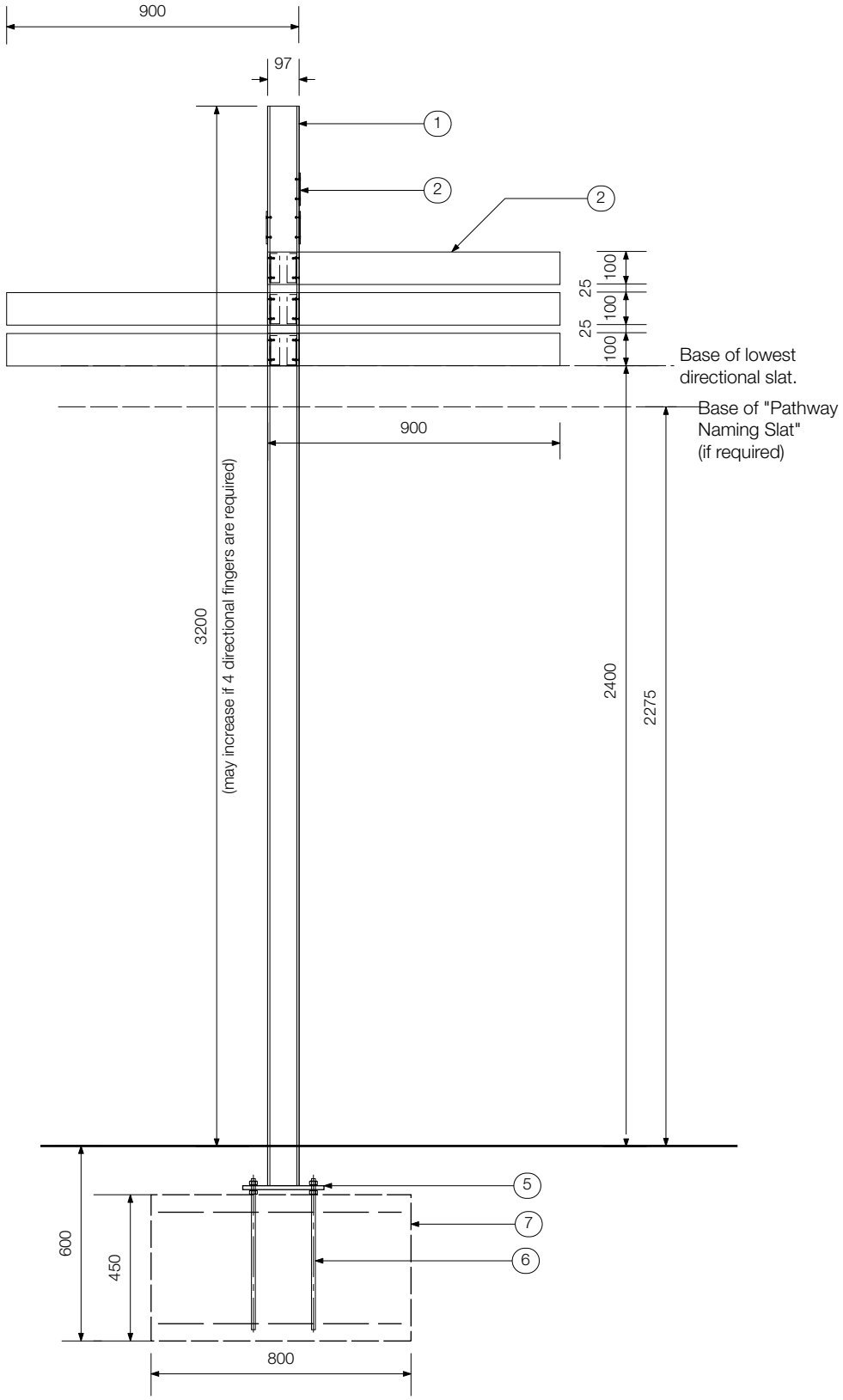

FRONT VIEW

Construction Details

Scale 1:20

Construction Details

Unless otherwise noted all dimensions in millimetres. Use figured dimensions in preference to scaling. Contractor to confirm all dimensions and details on site prior to manufacture.

1. Steel universal column (100 UC 14.8), hot dip galvanised. Pre drill and tap holes for screws (Item 4) prior to galvanising (Refer to Detail 2 for hole set out).
2. 6mm thick aluminium sign panel.
   2 pac paint with mask & sprayed graphics and anti graffiti clear coat over panel. Low sheen finish.
3. 30 x 30 x 3mm steel angle.
4. M6 stainless steel countersunk anti- theft screws.
5. 250 x 250 x 12mm steel base plate, FSB welded to universal column.
6. M12 galvanised steel caged footing bolts, minimum 400mm long, with galvanised steel leveling nuts.
7. Concrete pad footing minimum 800 x 800 x 450mm with concealed base plate. Min 600 deep. F82 mesh top and bottom.

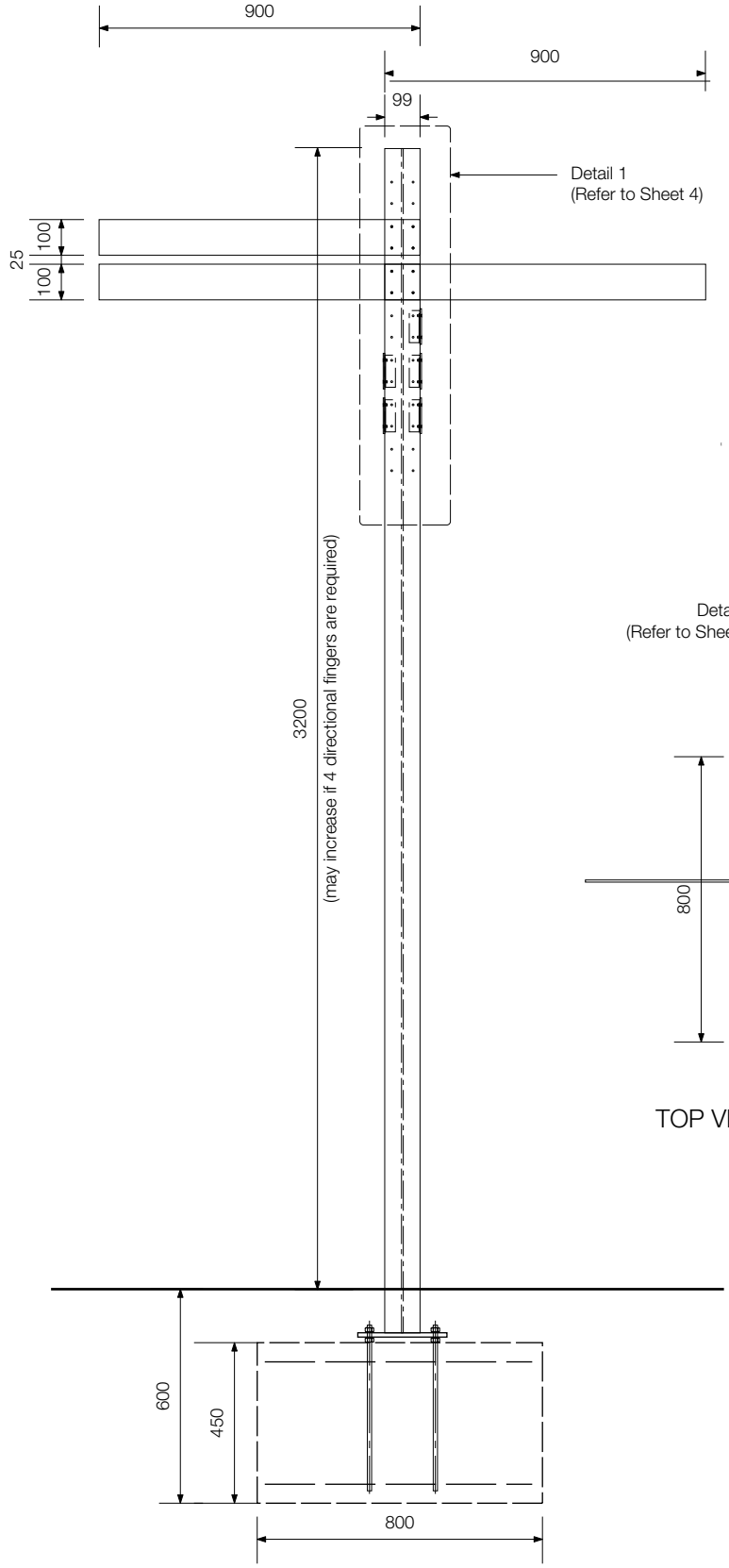

SIDE VIEW

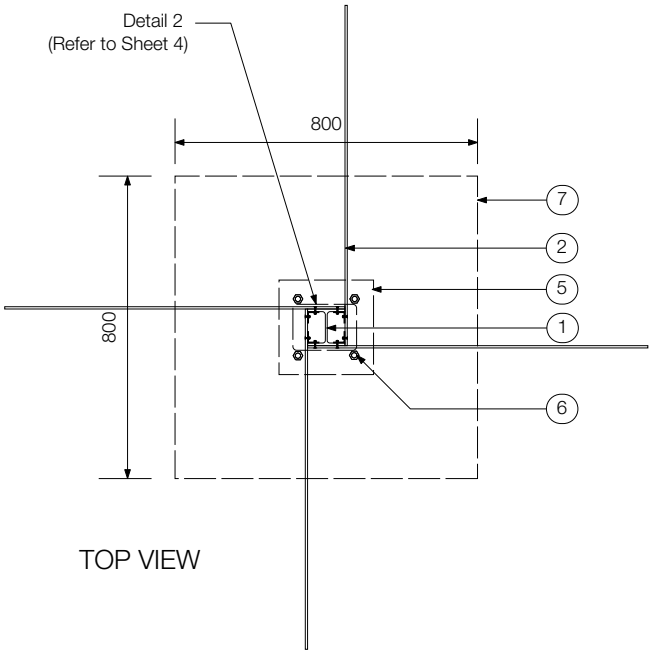

TOP VIEW

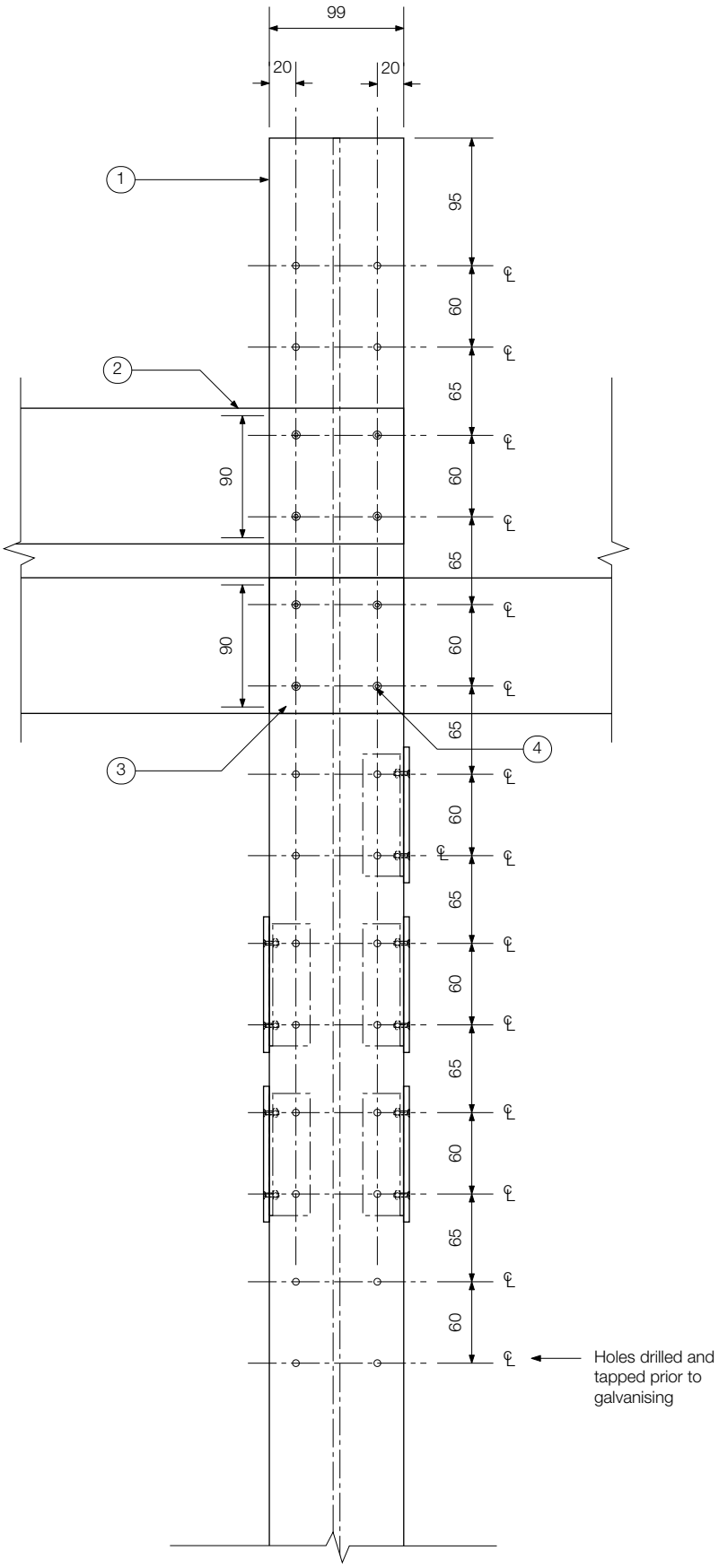

Detail 1

Scale 1:5

Construction Details

Unless otherwise noted all dimensions in millimetres. Use figured dimensions in preference to scaling. Contractor to confirm all dimensions and details on site prior to manufacture.

Principle	Section 3.4 Signage	
Construction details: directional finger sign	Revision: Draft	DESIGN INTENT ONLY DR1

Construction Details

Unless otherwise noted all dimensions in millimetres. Use figured dimensions in preference to scaling. Contractor to confirm all dimensions and details on site prior to manufacture.

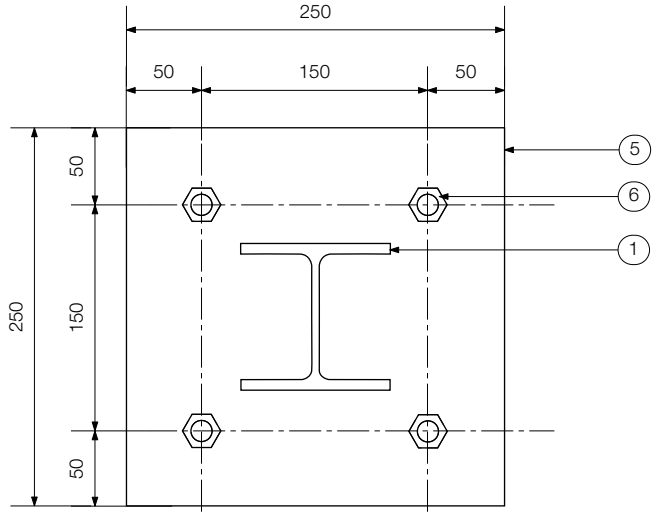

TOP VIEW

Base Plate Detail

Scale 1:5

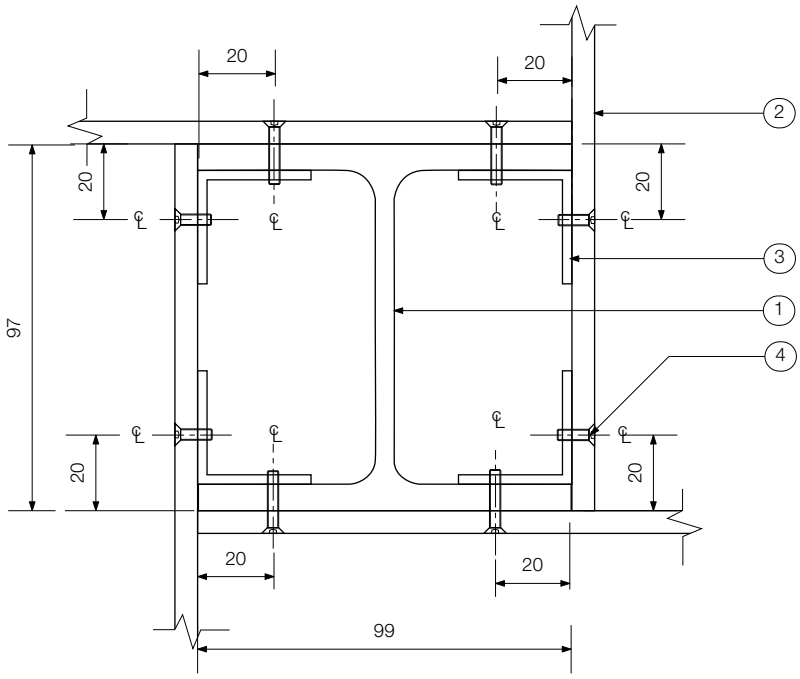

3-4 directions

Detail 2

Scale 1:2

Construction Details

Unless otherwise noted all dimensions in millimetres. Use figured dimensions in preference to scaling. Contractor to confirm all dimensions and details on site prior to manufacture.

1. Sign frame, steel parallel flange channel (150 PFC) with mitre joins in corners.

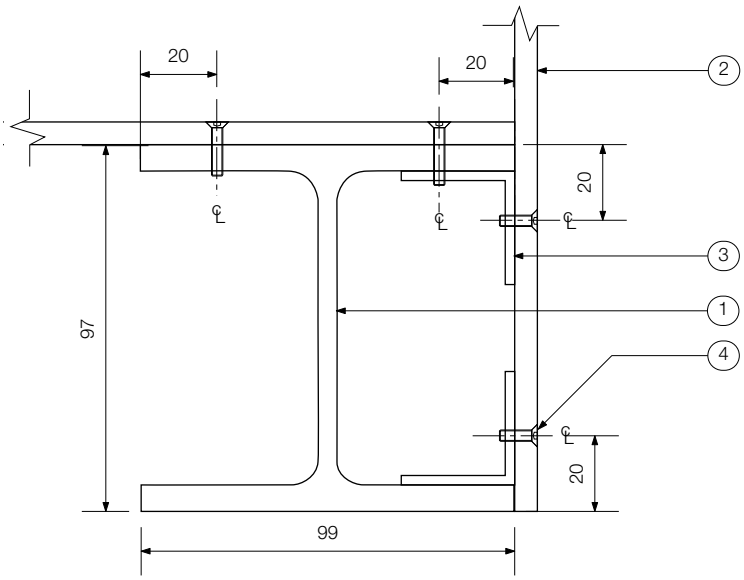

1-2 directions

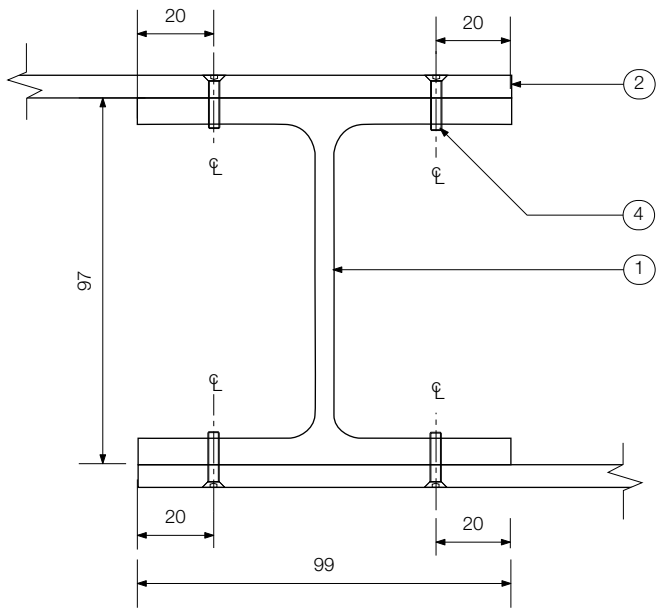

1-2 directions

Detail 2

Scale 1:2

3.4.5i Identification sign: DR2 - Pedestrian Directional Sign

Graphic Details

COLOUR
Background = To match Dulux Western Myall

Arrows = White

Pictograms = Black and white

Parking and Access pictograms = White and Pantone 653

SOPA Logo = PMS 116 and white

SIZE
Pictograms = 138 x 138mm

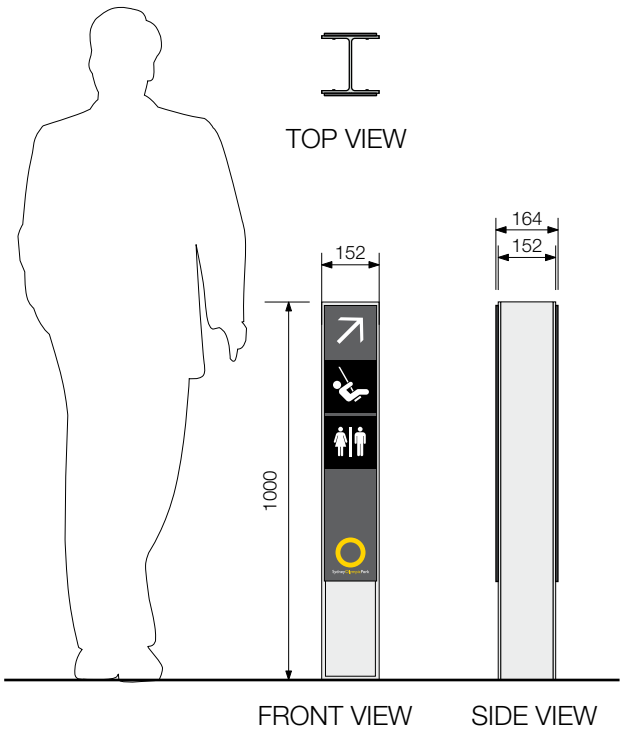

Double sided sign shown

Elevations

Scale 1:20

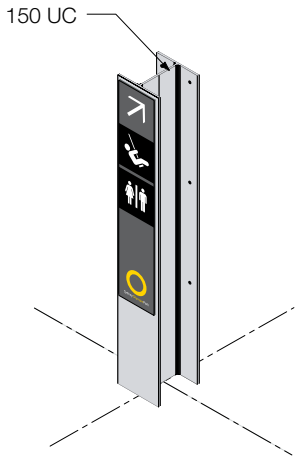

Double sided sign shown

Isometric View

Scale 1:20

Principle	Section 3.4 Signage	
Graphic details: pedestrian directional sign	Revision: Draft	DESIGN INTENT ONLY DR2

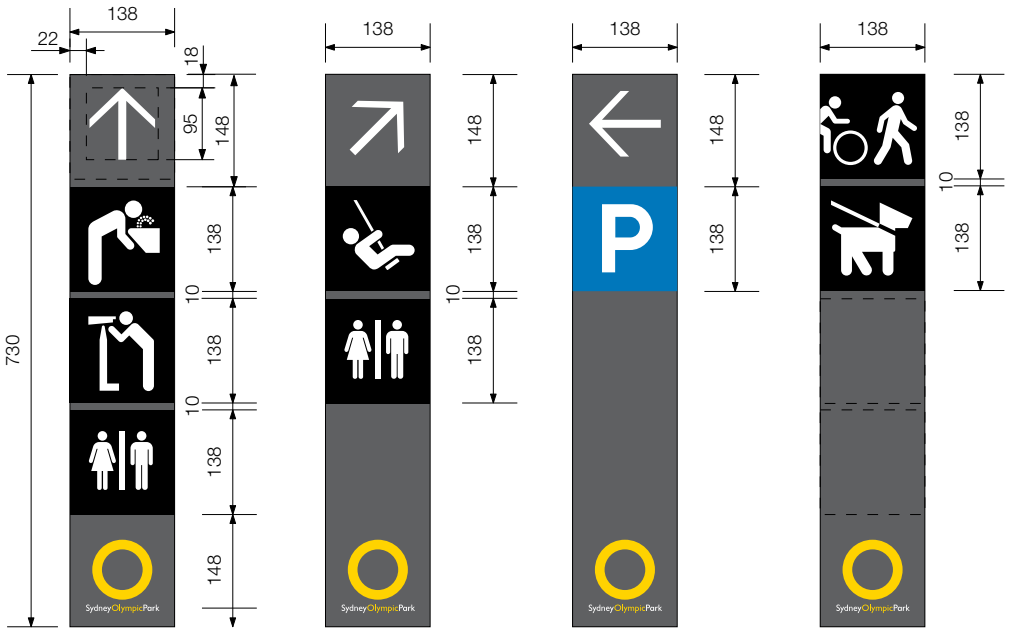

FRONT VIEW
3 pictograms

FRONT VIEW
2 pictograms

FRONT VIEW
1 pictogram

FRONT VIEW
Up to 4 pictograms
(no arrow)

One direction only

Graphic Layouts

Scale 1:10

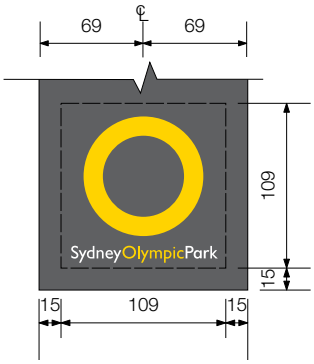

FRONT VIEW

Graphic Layout - Detail

Scale 1:5

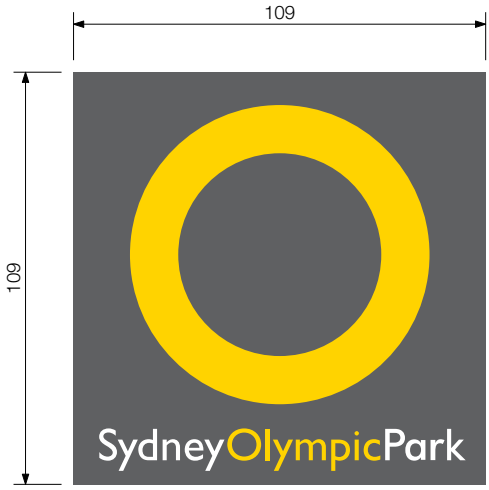

Shown within dashed outline above.
Digital artwork for this logo will be supplied by Dot Dash as an eps.

SOPA Logo zone

Scale 1:2

Construction Details

Unless otherwise noted all dimensions in millimetres. Use figured dimensions in preference to scaling. Contractor to confirm all dimensions and details on site prior to manufacture.

1. Steel universal column (150UC 23.4) galvanised.
2. Sign panel, 6mm thick aluminium, fine fillet on all edges to facilitate even paint coverage, 3mm radius on corners. 2 pac paint to match Dulux Charcoal with mask & sprayed graphics and anti graffiti clear coat over panel.
3. Steel base plate, 300 x 300 x 12mm thick, FSB welded to universal column.
4. M5 stainless steel, security style, button head socket cap machine screws with M5 stainless steel flat washer. At 305mm centres (nom).
5. M12 galvanised steel caged footing bolts, with galvanised steel leveling nuts, set into concrete footing, minimum 270mm long.
6. Concrete pad footing. F82 mesh top and bottom.

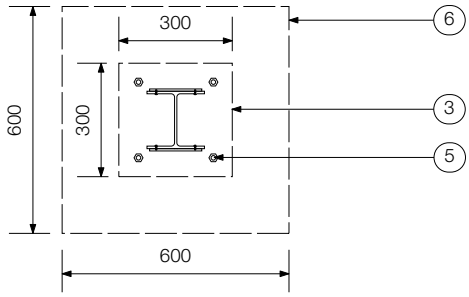

TOP VIEW

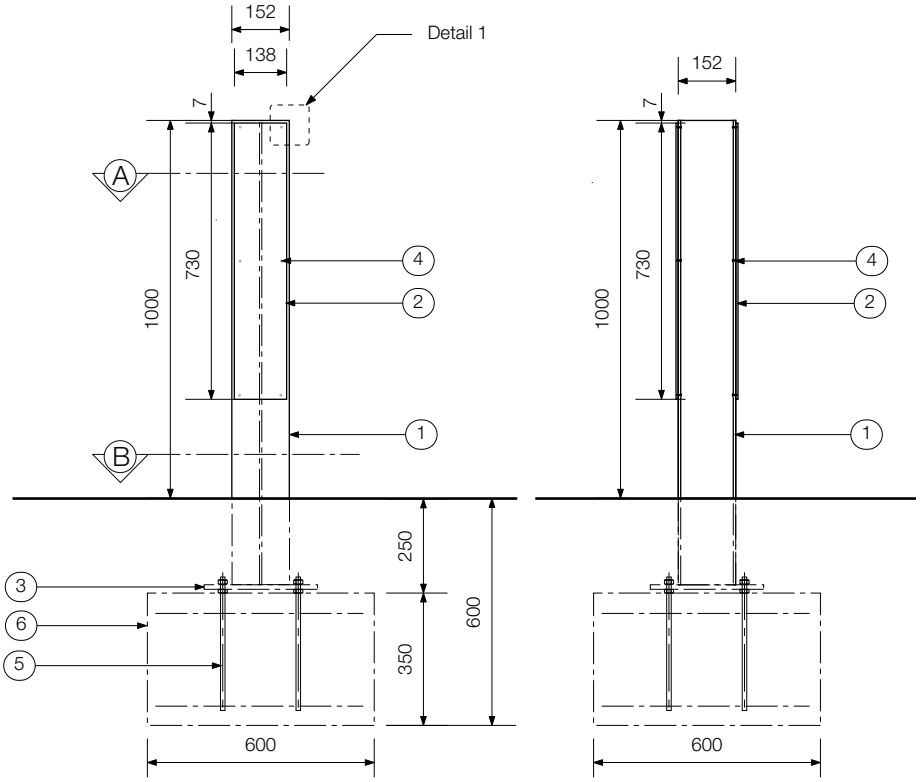

FRONT VIEW

SIDE VIEW

Construction Details

Scale 1:20

Construction Details

Unless otherwise noted all dimensions in millimetres. Use figured dimensions in preference to scaling. Contractor to confirm all dimensions and details on site prior to manufacture.

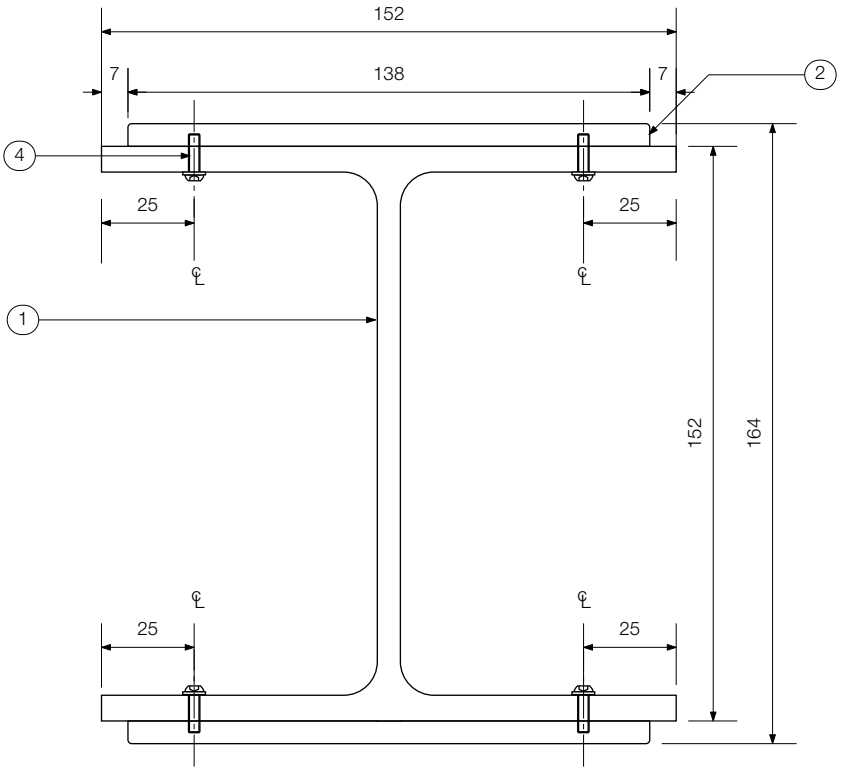

TOP VIEW

Double sided sign shown.

Section A

Scale 1:2

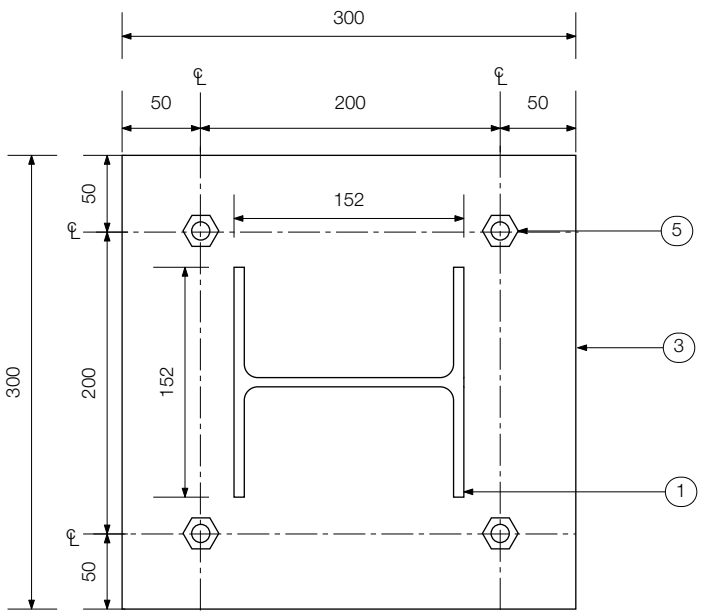

TOP VIEW

Section B

Scale 1:5

Construction Details

Unless otherwise noted all dimensions in millimetres. Use figured dimensions in preference to scaling. Contractor to confirm all dimensions and details on site prior to manufacture.

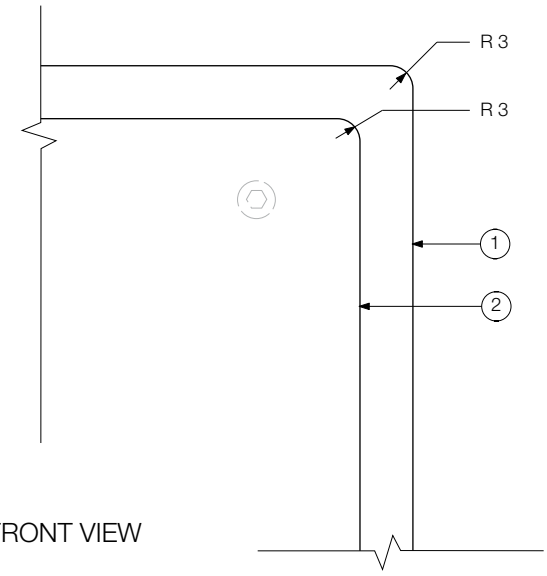

Detail 1

Scale 1:2

3.4.5j Directional sign: DR3 - Moveable Directional Finger Sign

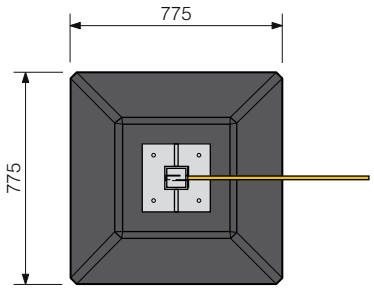

TOP VIEW

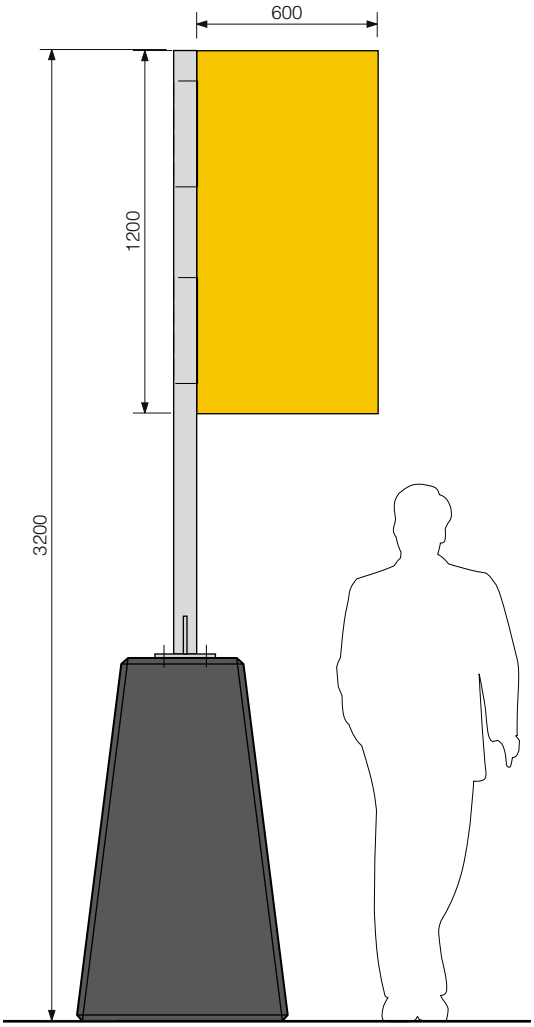

FRONT VIEW

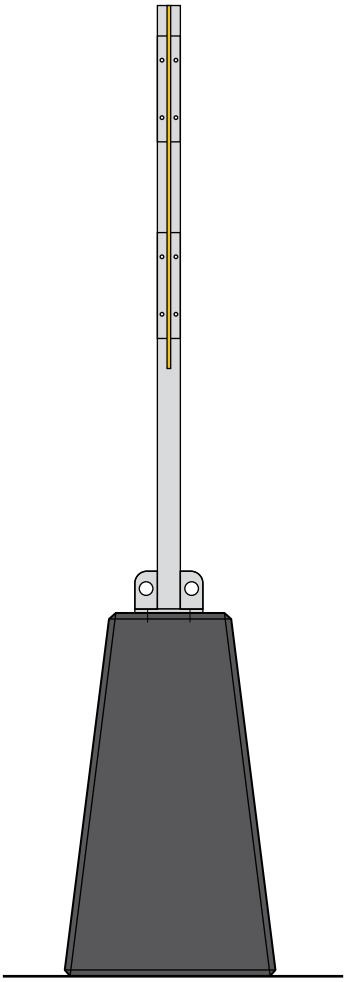

SIDE VIEW

Typical Location - Flag Sign

Scale 1:25

Graphic Details

COLOUR

Panel colour = Pantone 116 Yellow

Post = Galvanised steel

Concrete colour = Concrete Colour Systems 'Panther' or equal.

Principle	Section 3.4 Signage
Graphic details: moveable directional flag sign	Revision: Draft

DESIGN INTENT ONLY

DR3

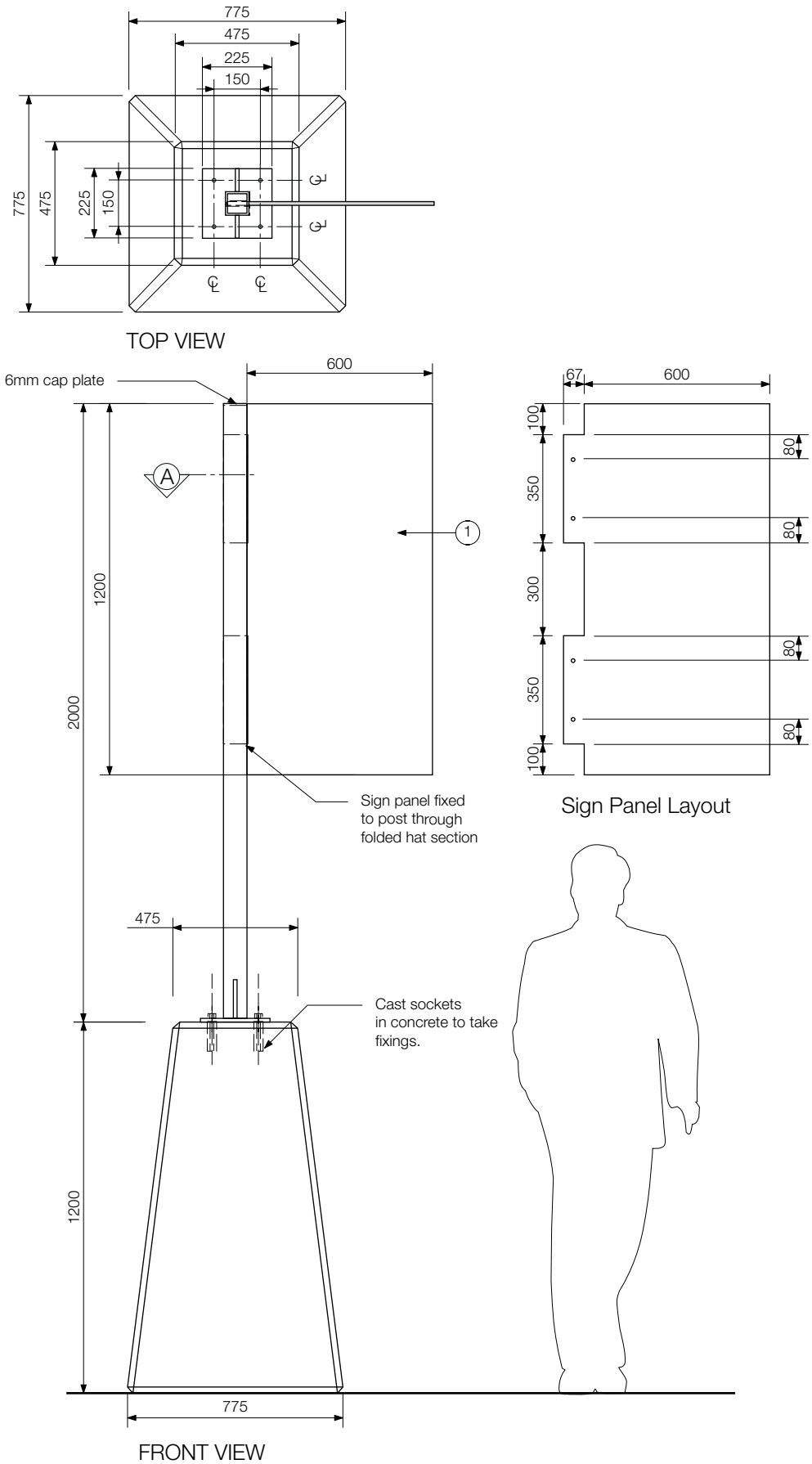

Elevations - Flag Sign
Scale 1:20

Construction Details

Unless otherwise noted all dimensions in millimetres. Use figured dimensions in preference to scaling. Contractor to confirm all dimensions and details on site prior to manufacture.

1. 12mm marine plywood sign face. Painted and fitted with hat section to fix to sign post.
2. 75 x 75 x4 SHS galvanised steel post with fully welded 12mm base plate. Cut slots 350mm long in 1 side of post to take sign face.
3. M16 hex head set screws fix base plate to precast sockets in concrete base.
4. Folded 1.2mm stainless steel hat section 350mm long fixed to sign face. No 4 horizontal linish.
5. Cast concrete base to Class 2 off form finish with a matt clear graffiti protective coating over. Cast sockets to take M16 set screws fix base plate. Apply a Refer to Engineers drawing 5674-4 for structural details.
6. Button head security style socket screws fixing through hat section into post.
7. Counter sunk hex socket head screws fixing through post into hat section frame and sign panel.
8. 125 x 12mm plate lifting lugs to each side for balanced lifting fully welded to post and base plate.

Construction Details

Unless otherwise noted all dimensions in millimetres. Use figured dimensions in preference to scaling. Contractor to confirm all dimensions and details on site prior to manufacture.

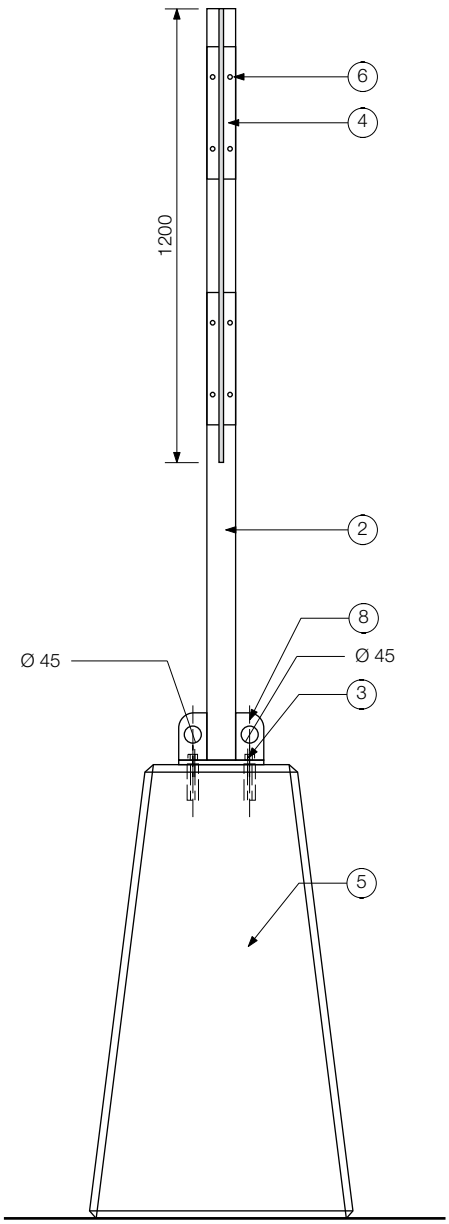

SIDE VIEW

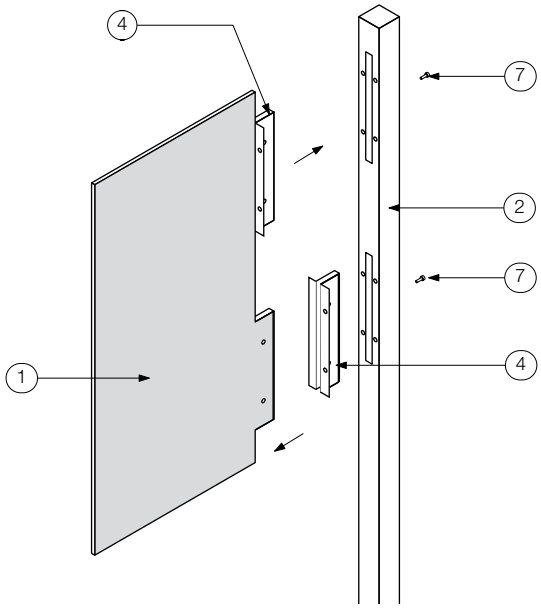

Isometric View - Sign Panel Connection
Scale NTS

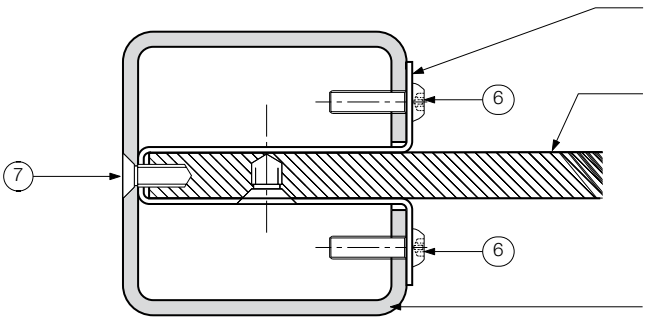

SECTION A-A

Section - Typical Flag Sign Panel Connecti
Scale 1:2

3.4.5k Information sign: IF1 - Regulatory Post

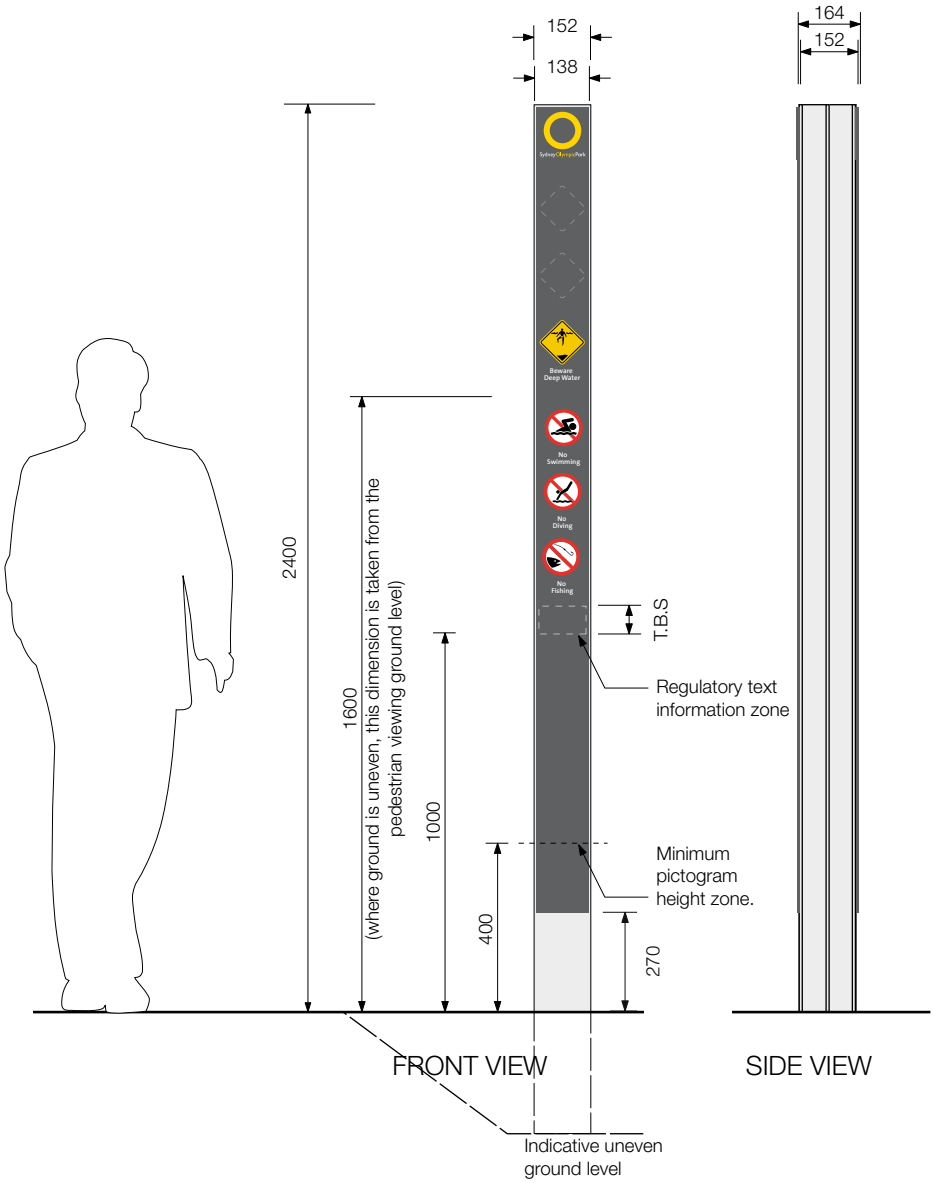

IF2 - Regulatory Structure

Scale 1:20

Graphic Details

COLOUR

Warning Pictograms = Black, white and Pantone 116C

Regulatory Pictograms = Black, white and Pantone Red 032C

SOPA Logo = Dulux Western Myall

PG1•F7, PMS 116 and white

Sign Panel = Dulux Western Myall

PG1•F7

SIZE

Pictograms = Warning =120 x 120mm

Regulatory =100 x 100mm

Pictogram Text = White, 12 mm X cap height.

Regulatory Info Text = White , 8 mm (nom) X cap height.

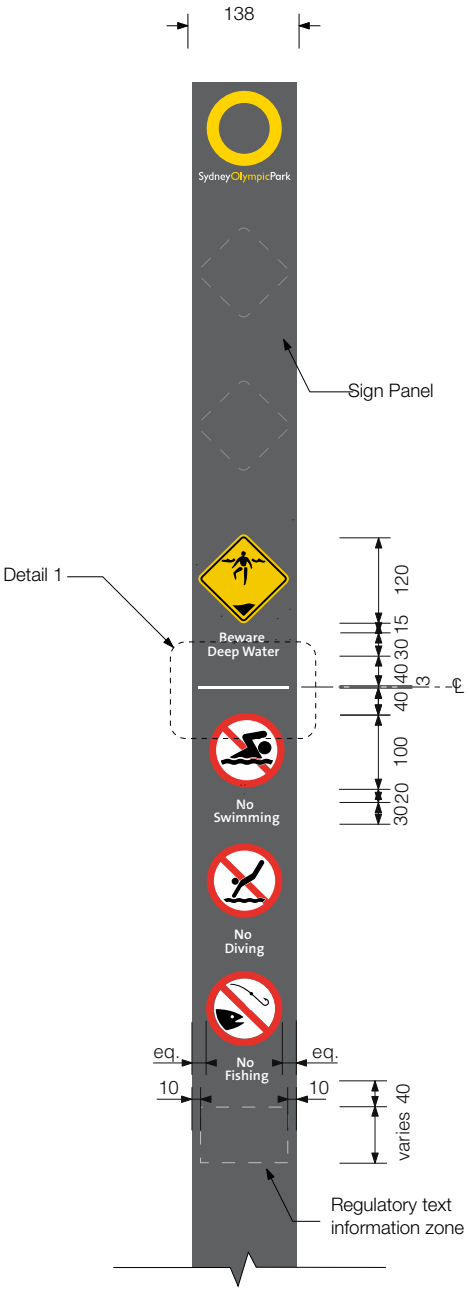

Detail 1

Scale 1:2

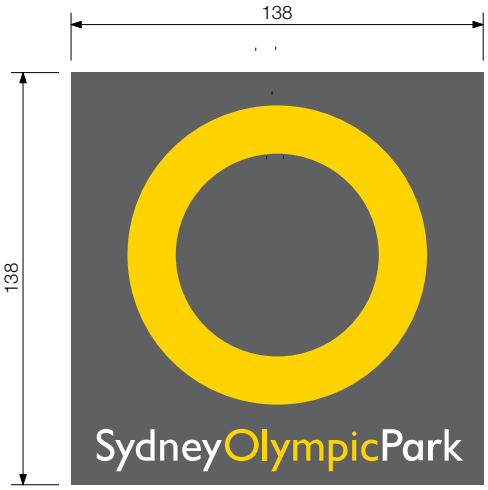

SOPA Logo zone

Scale 1:2

Graphic Layout

Scale 1:10

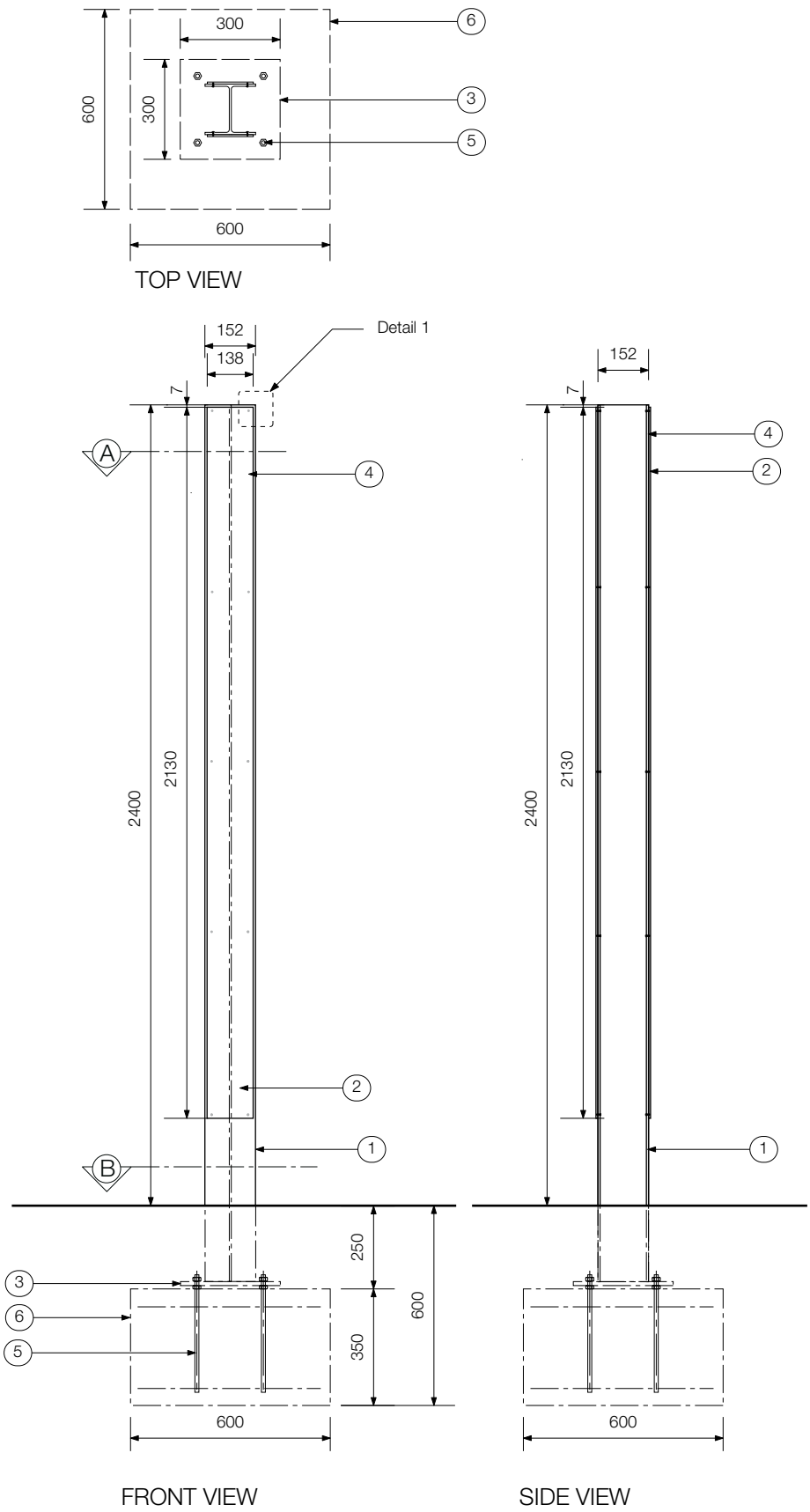

Construction Details

Scale 1:20

Construction Details

Unless otherwise noted all dimensions in millimetres. Use figured dimensions in preference to scaling. Contractor to confirm all dimensions and details on site prior to manufacture.

1. Steel universal column (150UC 23.4) galvanised.
2. Sign panel, 6mm thick aluminium, fine fillet on all edges to facilitate even paint coverage, 3mm radius on corners. 2 pac paint to match Dulux 'Western Myal PG1•F7' with mask & sprayed graphics with low sheen anti graffiti clear coating over sign panel only.
3. Steel base plate, 300 x 300 x 12mm thick, FSB welded to universal column.
4. M5 stainless steel, security style, button head socket cap machine screws with M5 stainless steel flat washer. At 305mm centres (nom).
5. M12 galvanised steel caged footing bolts, with galvanised steel leveling nuts, set into concrete footing, minimum 270mm long.
6. Concrete pad footing. F82 mesh top and bottom

Construction Details

Unless otherwise noted all dimensions in millimetres. Use figured dimensions in preference to scaling. Contractor to confirm all dimensions and details on site prior to manufacture.

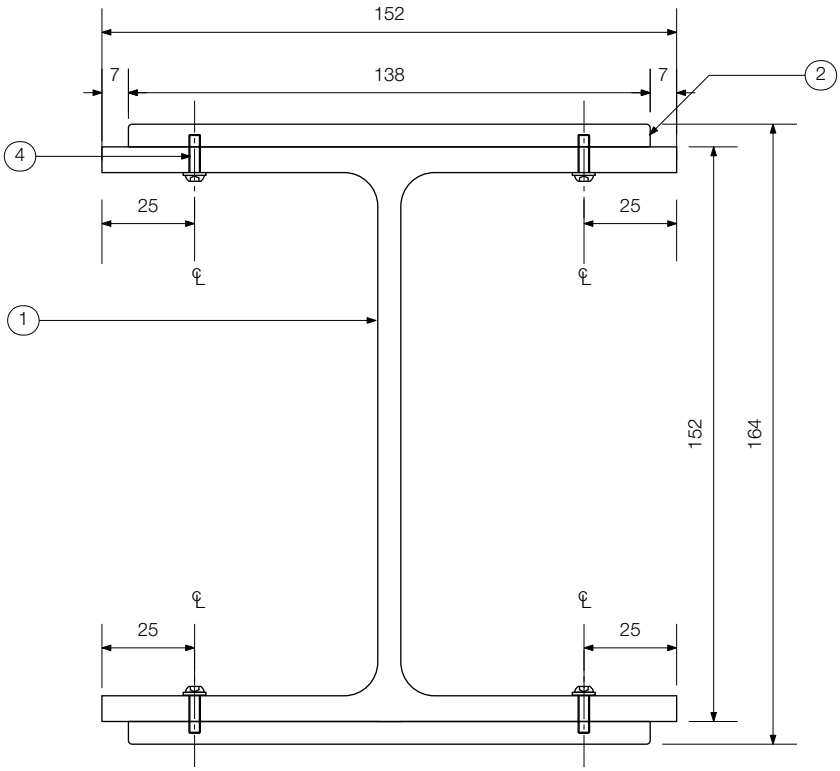

TOP VIEW

Double sided sign shown.

Section A

Scale 1:2

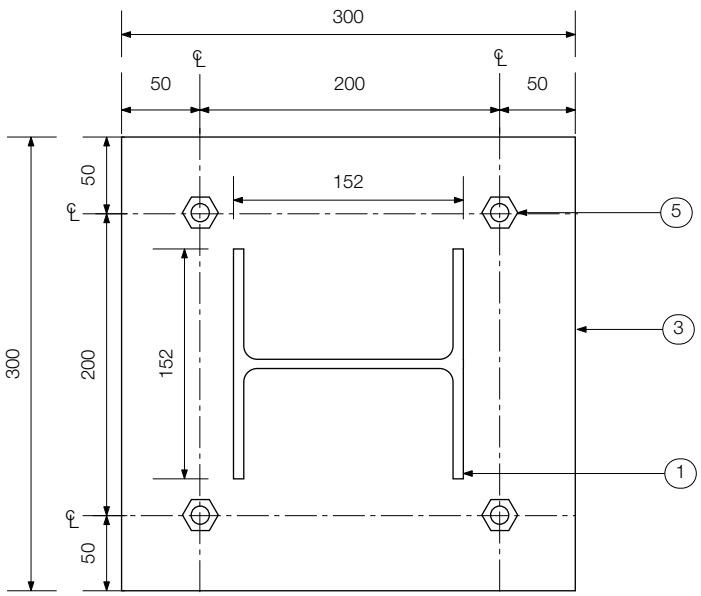

TOP VIEW

Section B

Scale 1:5

Construction Details

Unless otherwise noted all dimensions in millimetres. Use figured dimensions in preference to scaling. Contractor to confirm all dimensions and details on site prior to manufacture.

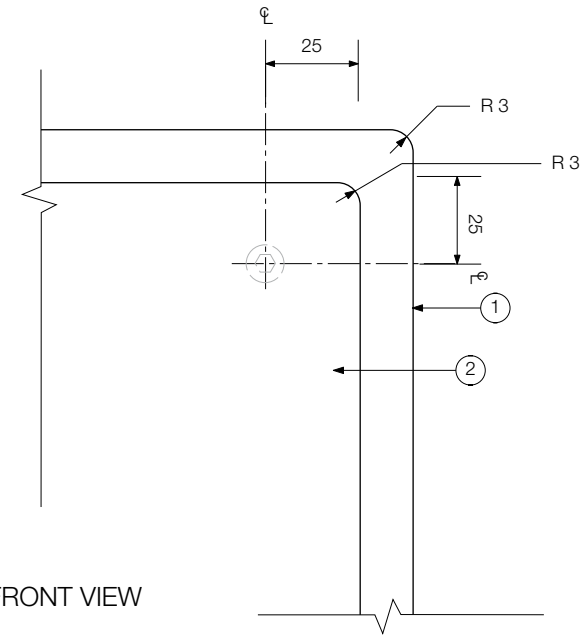

Detail 1

Scale 1:2

3.4.5l Regulatory sign: IF2 - Regulatory Sign

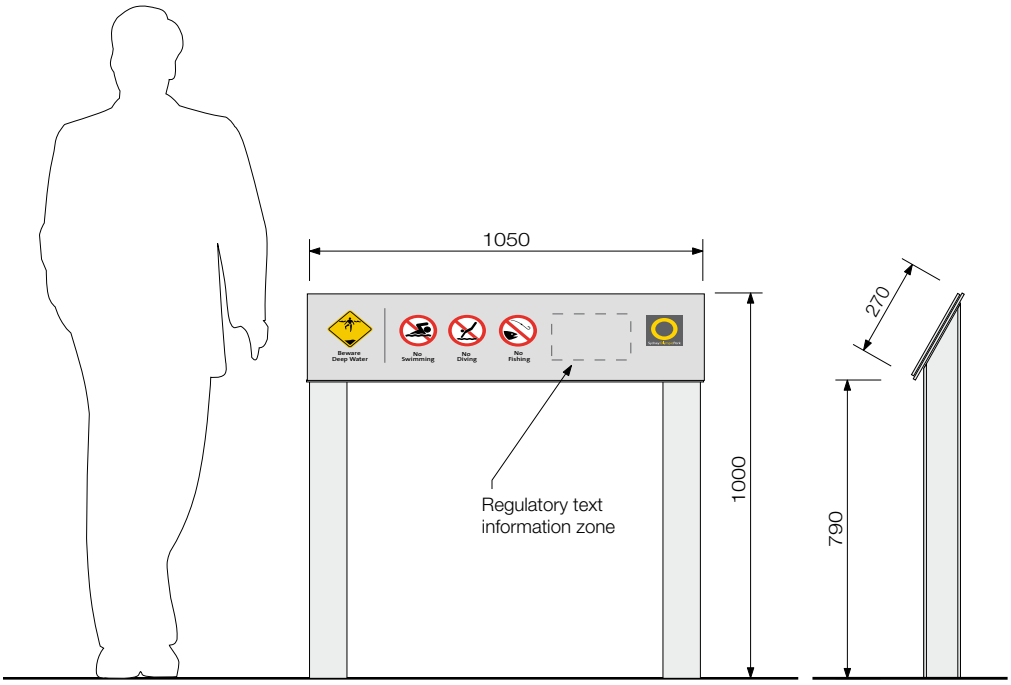

FRONT VIEW

SIDE VIEW

IF3 - Regulatory Structure

Scale 1:20

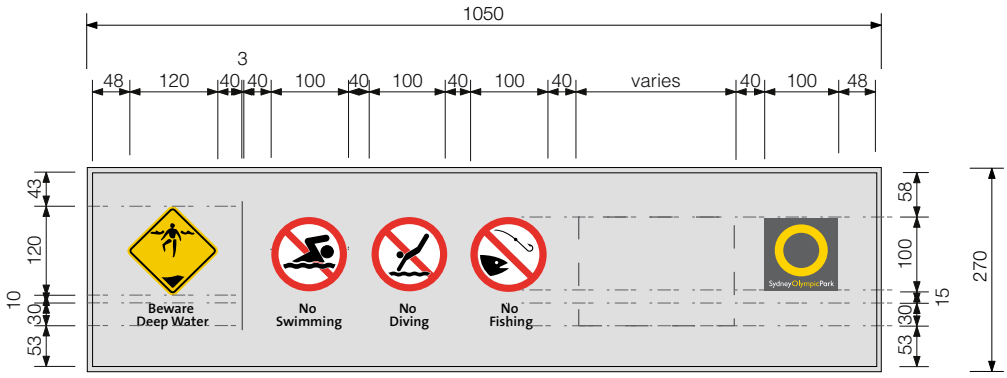

Graphic Layout - Graphic panel shown only

Scale 1:10

Graphic Details

COLOUR

Warning Pictograms = Black, white and Pantone 116C

Regulatory Pictograms = Black, white and Pantone Red 032C

SOPA Logo = Dulux Western Myall

PG1•F7, PMS 116 and white

SIZE

Pictograms = Warning =120 x 120mm

Regulatory =100 x 100mm

Pictogram Text = 12 mm X cap height.

Regulatory Info Text = 8 mm (nom) X cap height.

Construction Details

Unless otherwise noted all dimensions in millimetres. Use figured dimensions in preference to scaling. Contractor to confirm all dimensions and details on site prior to manufacture.

1. Sign fabricated from; Steel universal column (100UC 23.4) with 6mm signface backing panel welded to top and galvanised.
2. Sign panel, 6mm thick hot dip galvanised steel, fine fillet on all edges, 3mm radius on corners.
3. Steel base plate, 300 x 300 x 12mm thick, FSB welded to universal column.
4. M5 stainless steel, security style, button head socket cap machine screws with M5 stainless steel flat washer. At equidistant centres (nom).
5. M12 galvanised steel caged footing bolts, with galvanised steel leveling nuts, set into concrete footing, minimum 270mm long.
6. Concrete pad footing. F82 mesh top and bottom.
7. Fillet weld all round ground smooth prior to galvanizing.
8. Galvanised washers to allow for drainage between panels. 3mm (nom).

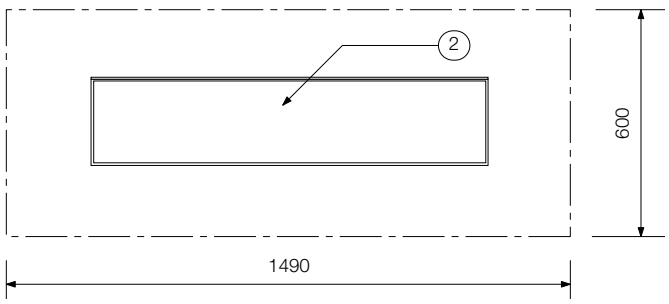

TOP VIEW

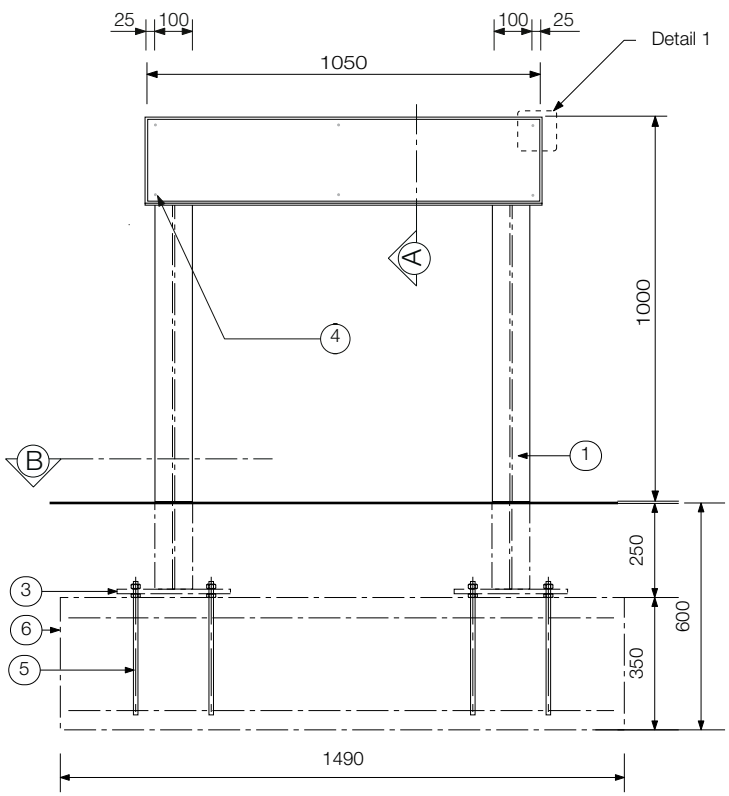

FRONT VIEW

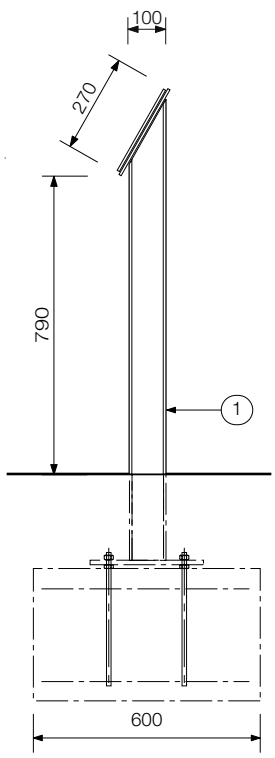

SIDE VIEW

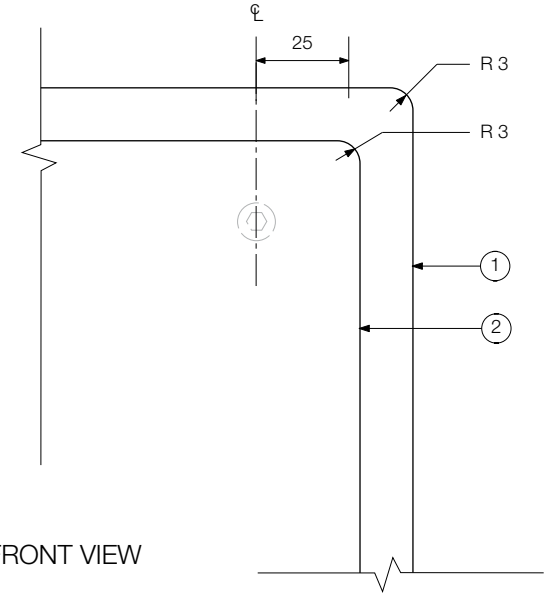

FRONT VIEW

Detail 1 Expanded

Scale 1:2

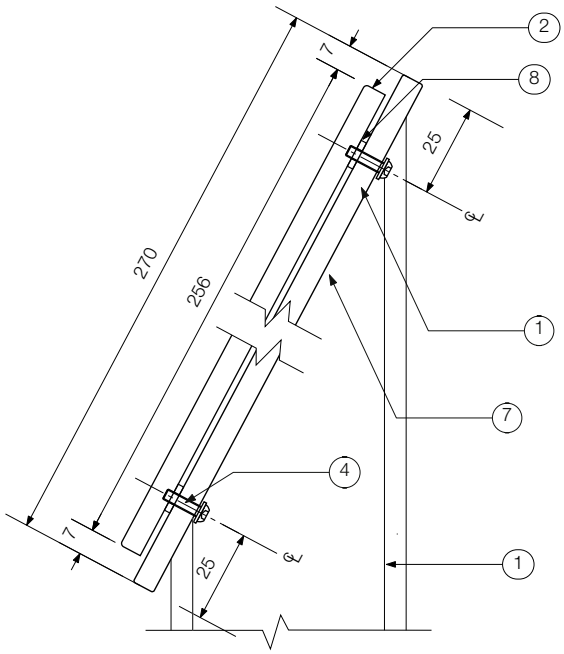

Section A

Scale 1:2

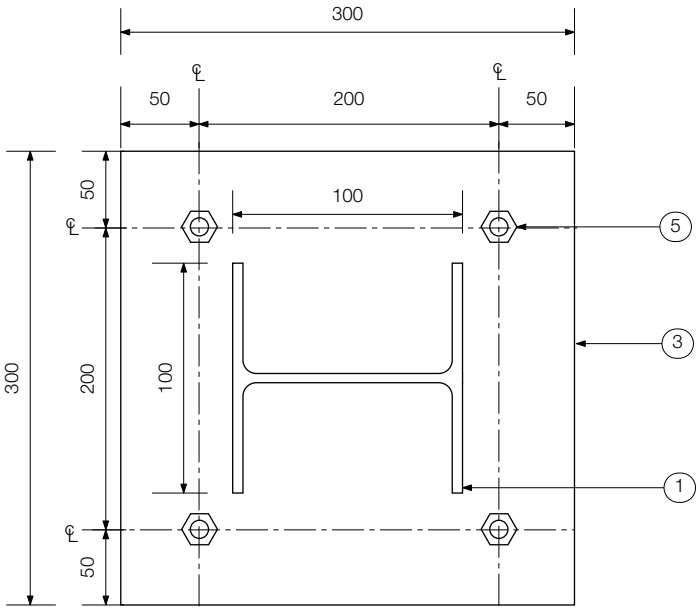

TOP VIEW

Section B

Scale 1:5

3.4.5m Regulatory sign: IF3 - Regulatory Sign

Graphic Details

FONT
The Sans Plain

SIZE
Pictogram information text = 15mm cap X height

Regulation text = 20mm cap X height

Note: Pictogram text information is indicative and to be provided by client.

COLOUR
Regulatory Pictogram = Black, white and Pantone Red 032C

'Sensitive Environment' pictogram Pantone 371.

SOPA Logo = Dulux Western Myall

PG1•F7, PMS 116 and white

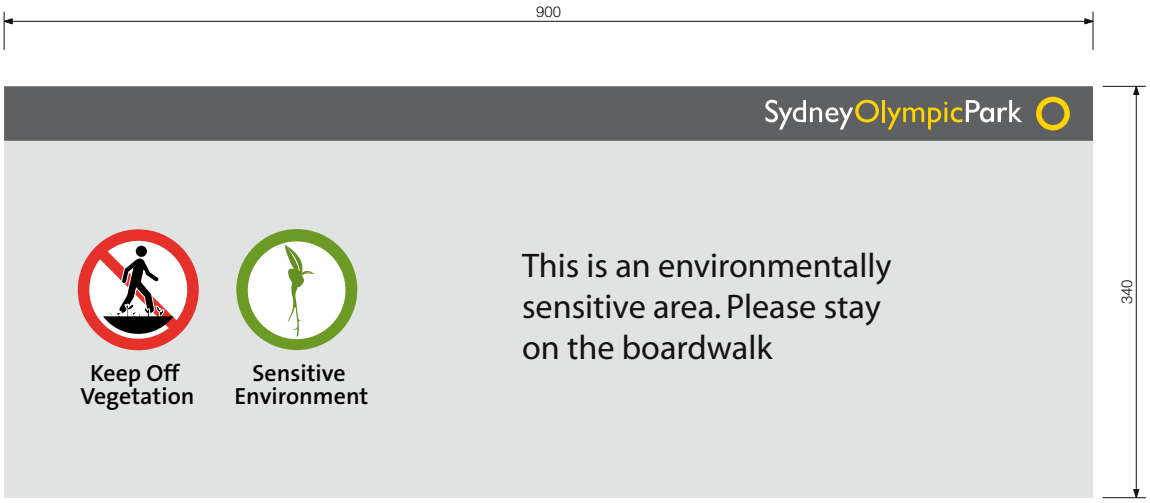

Graphic Composition - Artwork
Scale 1:5

Principle	Section 3.4 Signage	
Graphic details: regulatory sign	Revision: Draft	DESIGN INTENT ONLY IF3

3.4.6 Sign location plan

Sign location plan

Sign location plan shows the location and orientation of all signs. This should be based on an accurate plan of the site.

Sign locations show clearly the number of faces the sign will have and the direction the sign is facing. The sign location is numbered by the sign type followed by a unique number starting at 01. Refer to typical example below.

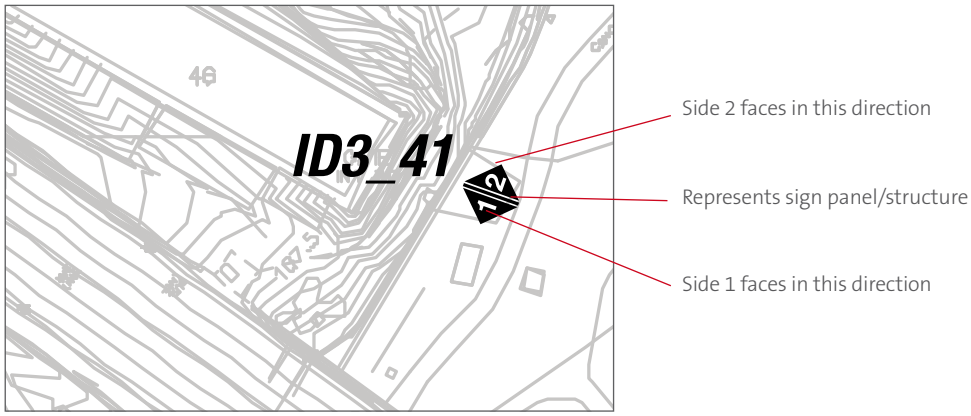

Double sided sign example

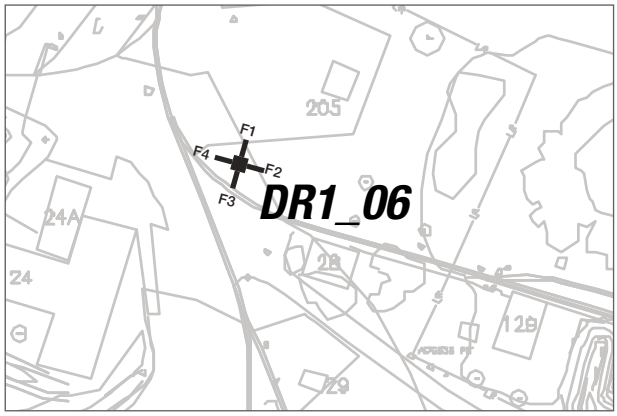

Finger sign example

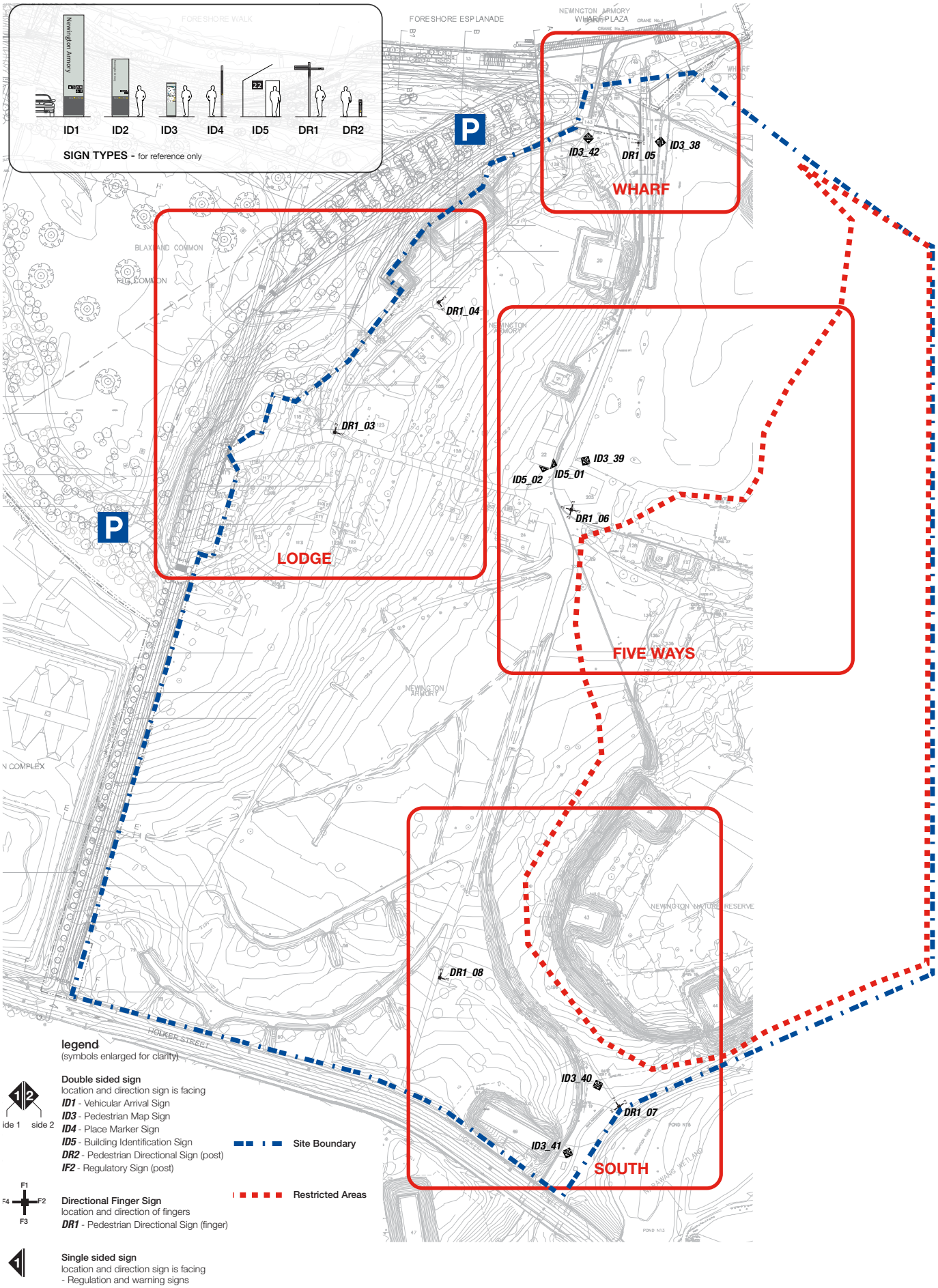

Principle	Section 3.4 Signage	
Typical sign location plan	Revision: Draft	DESIGN INTENT ONLY

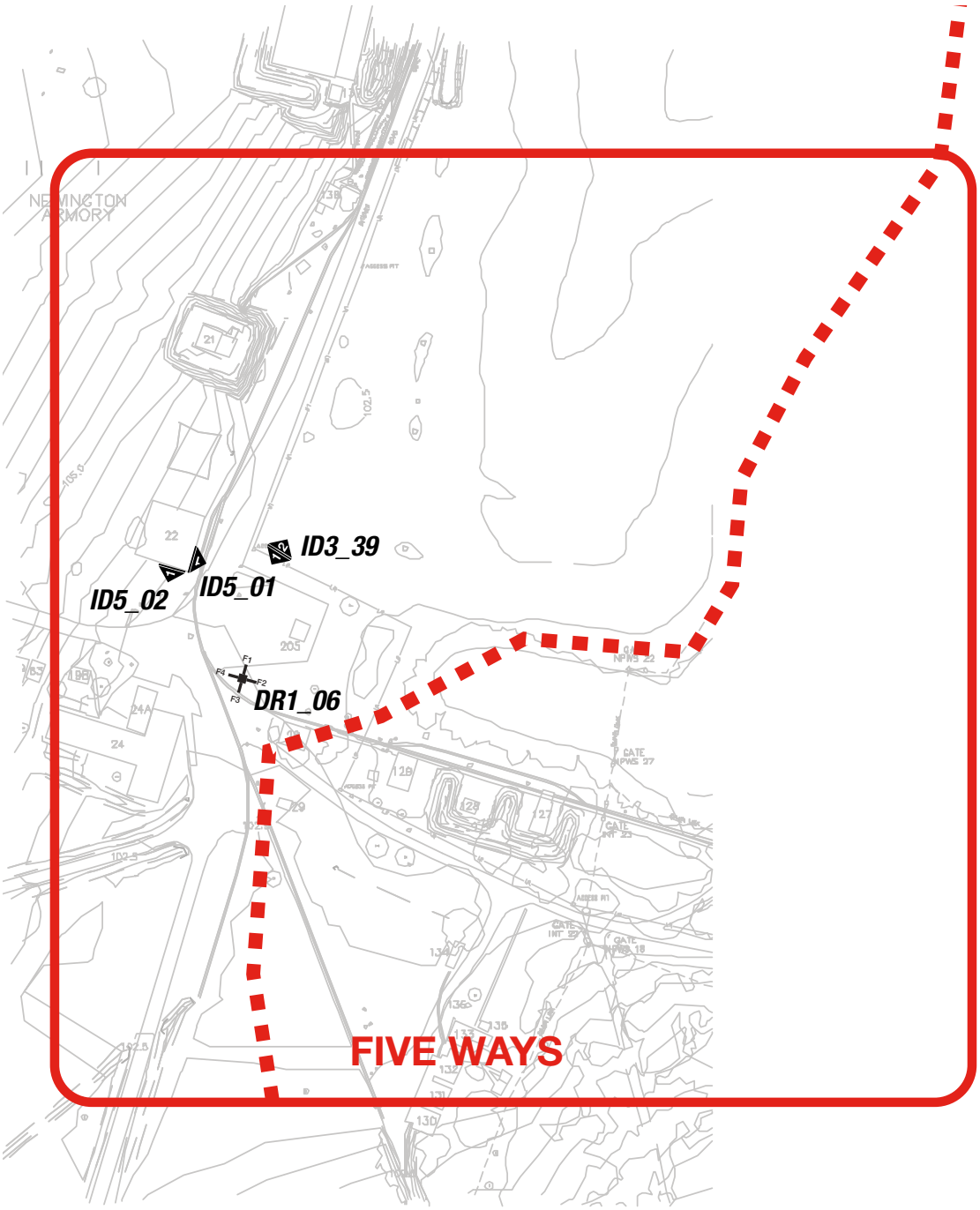

Detail Five Ways

Principle	Section 3.4 Signage	
Typical sign location plan	Revision: Draft	DESIGN INTENT ONLY

3.4.7 Sign schedule

Sign Schedule

The Sign Schedule is a reference document that provides information about the content of each of the signs within the site. Each sign is referenced using a unique code. The Sign schedule should be read in conjunction with the Sign Location Plan.

The schedule may be generated as a database document and should code the signs and provide the following minimum information:

Sign type code;

Sign number;

Location reference;

Side 1 message;

Side 2 message (if required);

Specific notes about that sign.

Refer to graphic standards and the drawings for each sign type in the manual

Refer to the following page for a typical example of a sign schedule. Note that this schedule relates to the sign location plan shown on page 74.

Steps to Follow

1. Title the sign schedule with the name of the area concerned (e.g. Newington Armory Wharf)

2. Number sign

- Sign type (e.g.. ID3) followed by the number of that sign at the site (i.e. ID3_38).

3. Note if the sign is one or two sided.

4. Briefly comment on the location of the sign on the map for ease of reference.

5. Detail the message to be applied to the sign on side one (and side two if applicable).

- Refer to graphic reference pages 14-15 for pictogram codes.

6. Add notes concerning - installation of the sign - location details

7. Ensure page number and date on the footer is correct.

8. Repeat steps for all proposed signs.

Sign No	Location		Message Side 1	Side 2	Notes
DR1_05 Sign Type DR1 No of Sides 2 Phase - Armory 1 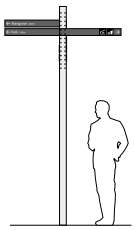	**WHARF**	Finger 1 Points North Finger 2 Points East Finger 3 Points South Finger 4 Points West	← Armory WHARF 30M ← Armory Gallery - Bldg 18 50m ← Armory Amphitheatre 400m ← Armory Theatre - Bldg 22 400m ← Birds Australia - Bldg 130-136 520m ← Blaxland Riverside Park 60m ← PMF 30m	Mirror image of side 1 Mirror image of side 1 Mirror image of side 1 Mirror image of side 1	
ID3_38 Sign Type ID3 No of Sides 2 Phase - Armory 1 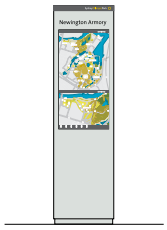	**WHARF**		Armory Gallery - Bldg 18 (detailed Armory map Panel) West)	Armory Gallery - Bldg 18 (What's on cabinet)	
ID3_42 Sign Type ID3 No of Sides 2 Phase - Armory 1 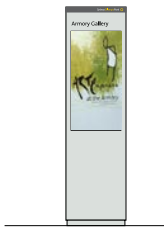	**WHARF**		Newingon Armory (What's on cabinet)	Newington Armory (detailed Armory map Panel) South ← Newington Armory Venues PMF →	
DR1_06 Sign Type DR1 No of Sides 2 Phase - 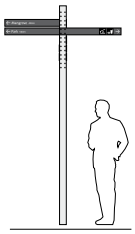	**FIVE WAYS**	Finger 1 Finger 2 Finger 3 Finger 4	← Armory Gallery - Bldg 18 425m ← Armory Wharf 450m ← Blaxland Riverside Park 480m ← PMF 450m ← Birds Australia - Bldg 130-136 160m ← Education Centre Bldg 46 700m ← The Lodge 200m	Mirror image of side 1 Mirror image of side 1 Mirror image of side 1 Mirror image of side 1	Sign pole (100UC) will need to be longer than usual. refer to 4042_DR1.

3.4.5d Identification sign: ID4 - Place Marker

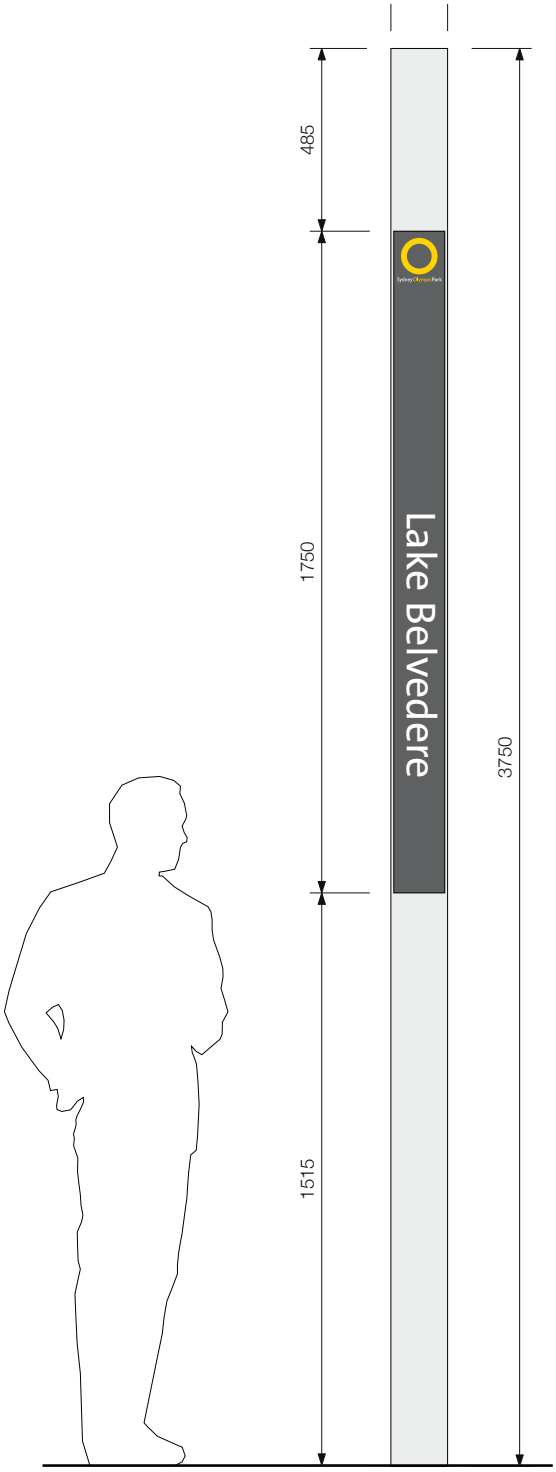

FRONT VIEW

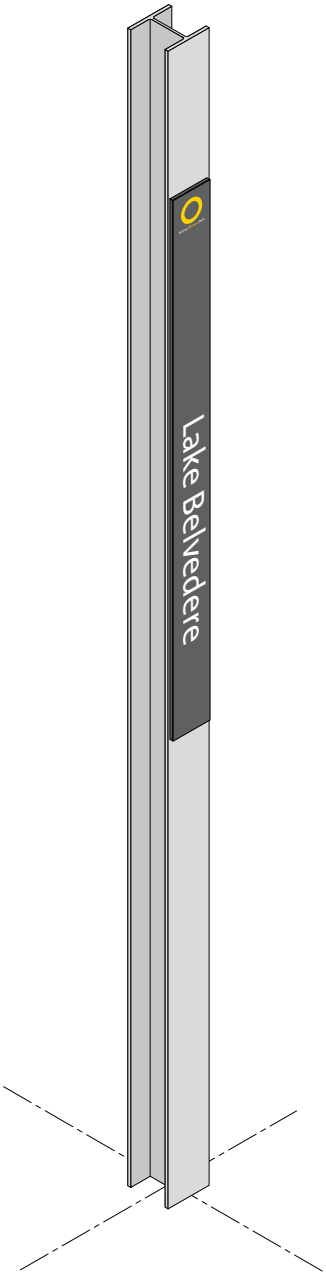

ISOMETRIC VIEW

Typical Location

Scale 1:20

Principle	Section 3.4 Signage	
Graphic details: pedestrian place marker	Revision: Draft	DESIGN INTENT ONLY ID4

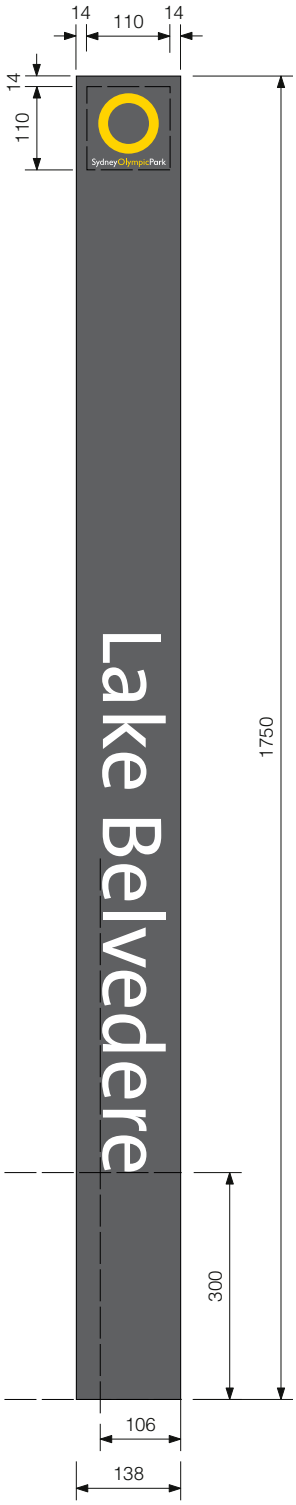

FRONT VIEW

Graphic Layout - Detail
Scale 1:10

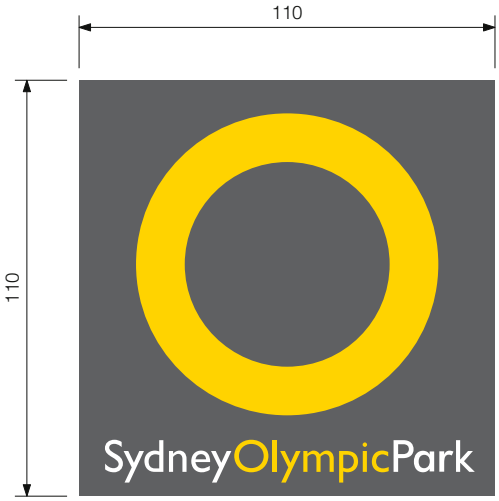

Shown within dashed outline opposite.
Digital artwork for this logo will be supplied by Dot Dash as an eps.

SOPA Logo zone
Scale 1:2

Graphic Details

FONT
The Sans Plain

SIZES
Text = 75mm cap X height

COLOUR
Sign Panel = to match Dulux Charcoal

Text = White

SOPA logo = Pantone 116C and white

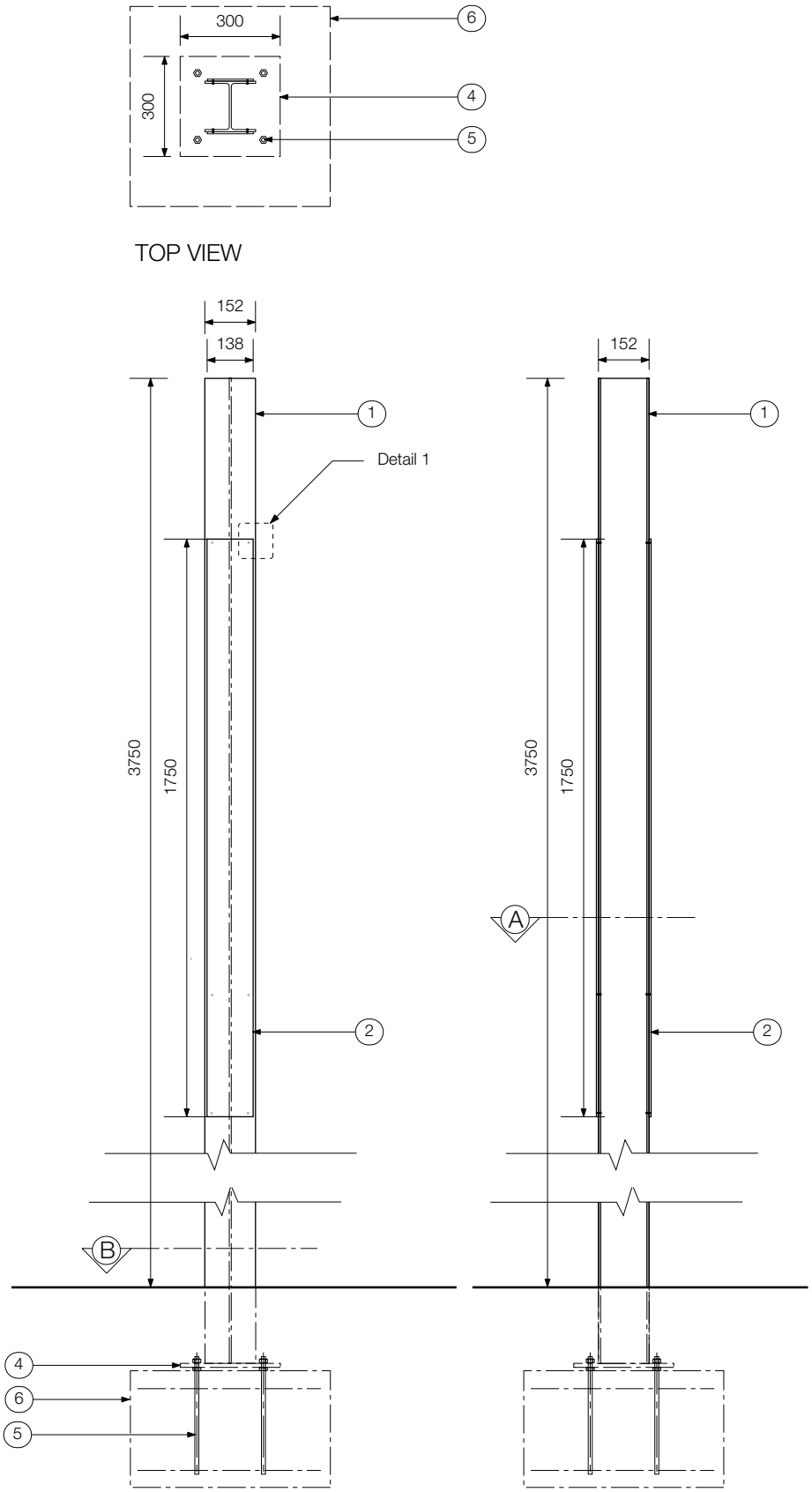

Construction Details

Scale 1:20

Construction Details

Unless otherwise noted all dimensions in millimetres. Use figured dimensions in preference to scaling. Contractor to confirm all dimensions and details on site prior to manufacture.

1. Galvanised steel universal column (150UC 23.4)
2. Sign panel, 6mm aluminium, 1mm fillet on all edges and corners. 2 pac paint to match Dulux Western Myall (low sheen finish) with mask & sprayed graphics and anti graffiti clear coat (low sheen finish).
3. M5 stainless steel, security style, button head socket cap machine screws with M5 stainless steel flat washer. At 345mm centres.
4. 12mm steel base plate FSB welded to sign frame.
5. M12 galvanised steel caged footing bolts, minimum 400mm long, with galvanised steel levelling nuts, set into concrete footing. Sign maker's engineer to confirm these dimensions.
6. Concrete pad footing. F82 mesh top and bottom. Size to be determined by the sign maker's engineer.

Construction Details

Unless otherwise noted all dimensions in millimetres. Use figured dimensions in preference to scaling. Contractor to confirm all dimensions and details on site prior to manufacture.

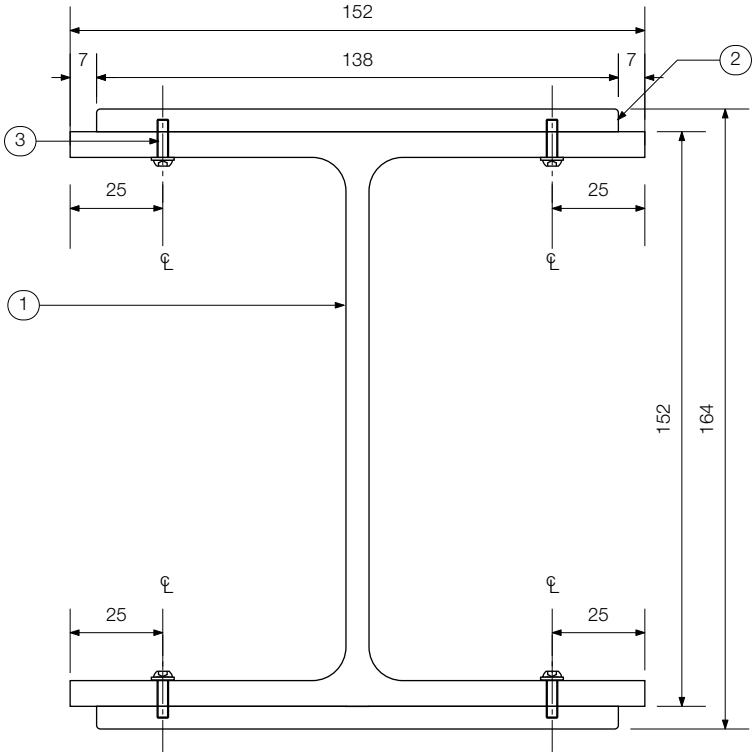

TOP VIEW

Double sided sign shown.

Section A

Scale 1:2

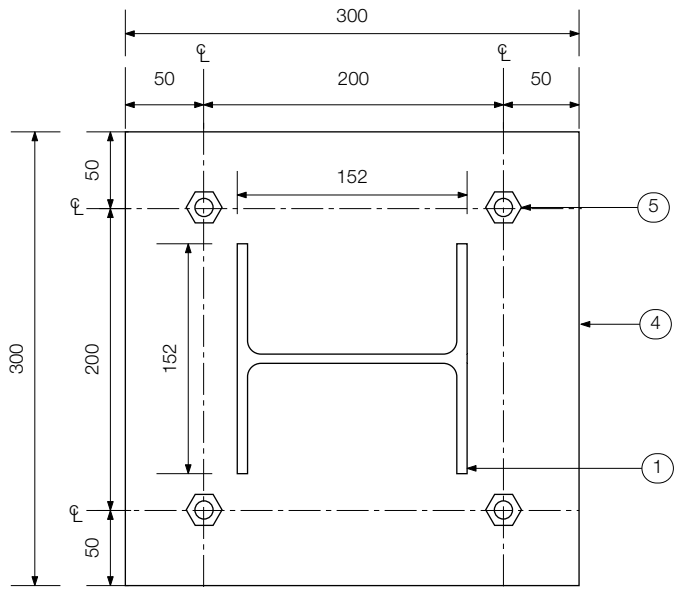

TOP VIEW

Section B

Scale 1:5

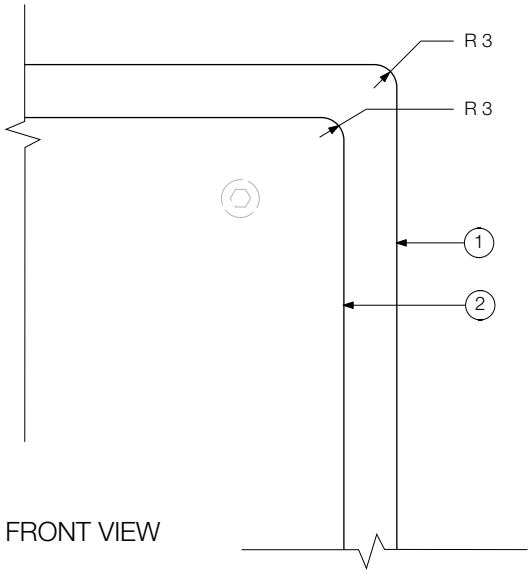

FRONT VIEW

Detail 1

Scale 1:2

3.4.5e Identification sign: ID5 - Armory Building Identification Sign

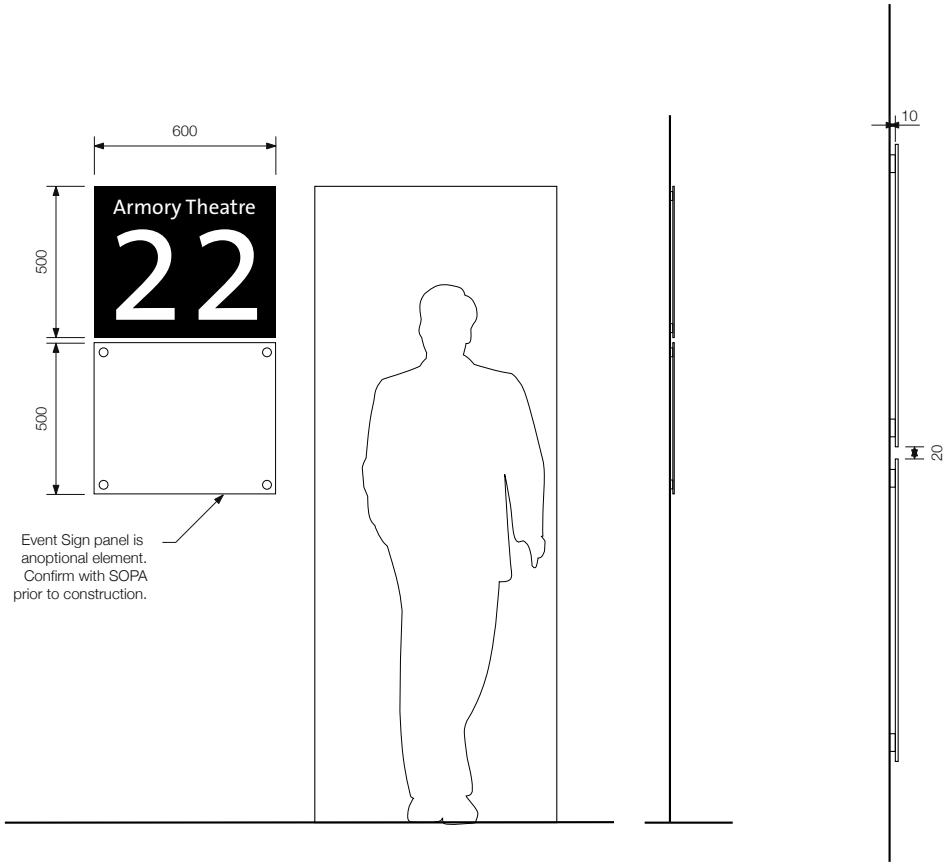

FRONT VIEW

Building ID: 6mm thick aluminium panel 2 pac painted, mask and spray graphics pinned 10mm off wall with stainless steel vandal resistant pin fixings. No fasteners to be visible on sign face.

Event Sign: 6mm thick satin natural anodised removable aluminium panel. Stainless steel vandal resistant pin fixings. UV resistant adhesive vinyl graphic applied to face (by signmaker). No fasteners to be visible on sign face.

SIDE VIEW

SIDE VIEW

X cap heights:
numbers = 305mm
name = 47mm

Colour
Building ID panel = Dulux Spanish Eyes
Numbers = White (Dulux Lexicon)

Elevations
Scale 1:20

Detail
Scale 1:10

Graphic Details

FONTS
X cap heights:

Numbers = 305mm

Name = 47mm

COLOUR
Building ID panel = Dulux Spanish Eyes

Numbers = White (Dulux Lexicon)

Construction Details

Building ID: 6mm thick aluminium panel 2 pac painted, mask and spray graphics pinned 10mm off wall with stainless steel vandal resistant pin fixings. No fasteners to be visible on sign face.

Event Sign: 6mm thick satin natural anodised removable aluminium panel. Stainless steel vandal resistant pin fixings. UV resistant adhesive vinyl graphic applied to face (by signmaker). No fasteners to be visible on sign face.

3.4.5f Identification sign: ID6 - Moveable Blade Sign

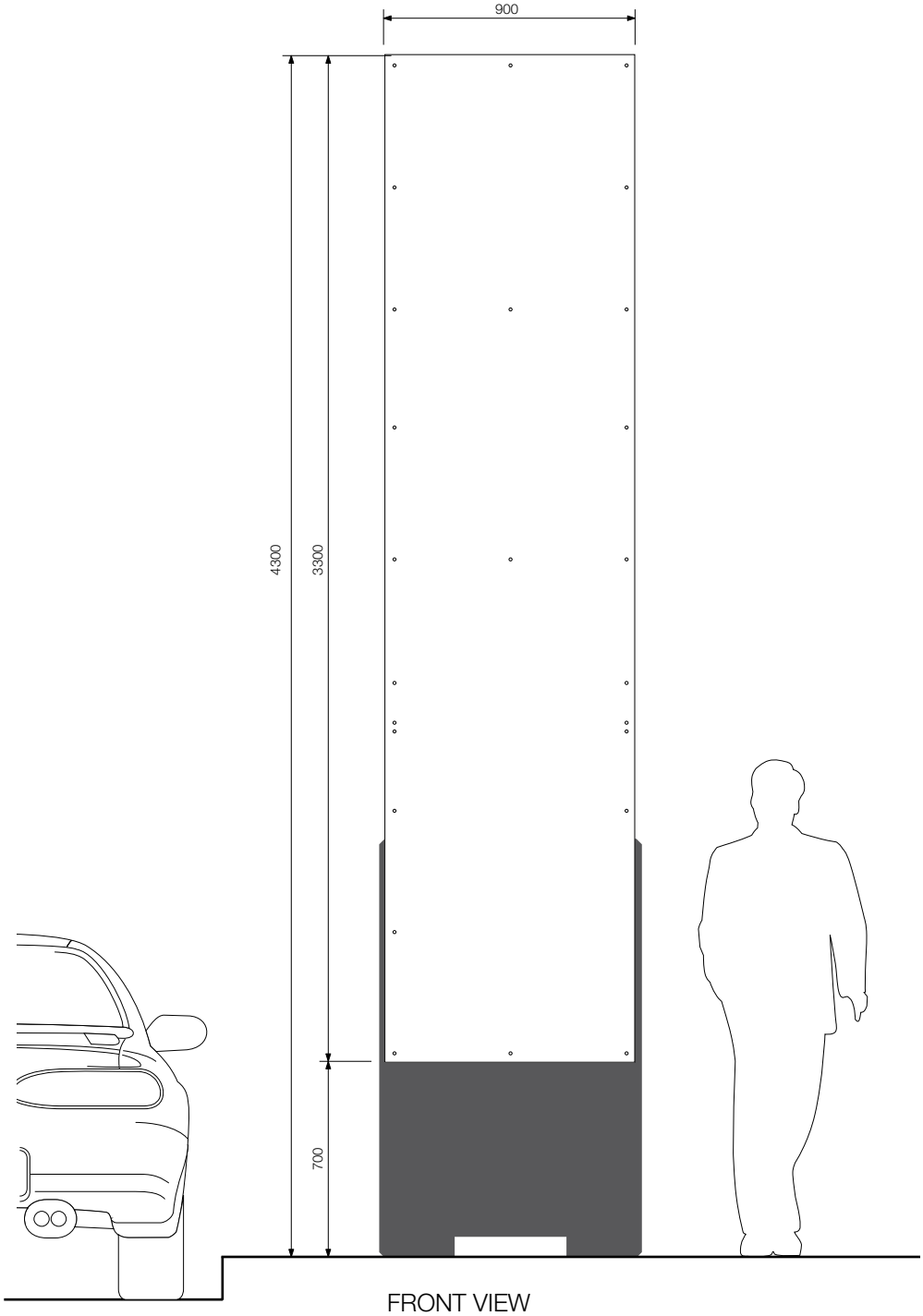

Elevations - 4m Vehicular Blade

Scale 1:20

Graphic Details

COLOUR

Cladding colour = White

Trim = Pantone 116 Yellow

Concrete colour = Concrete Colour Systems 'Panther' or equal.

Principle	Section 3.4 Signage	
Graphic details: moveable blade sign	Revision: Draft	DESIGN INTENT ONLY ID6

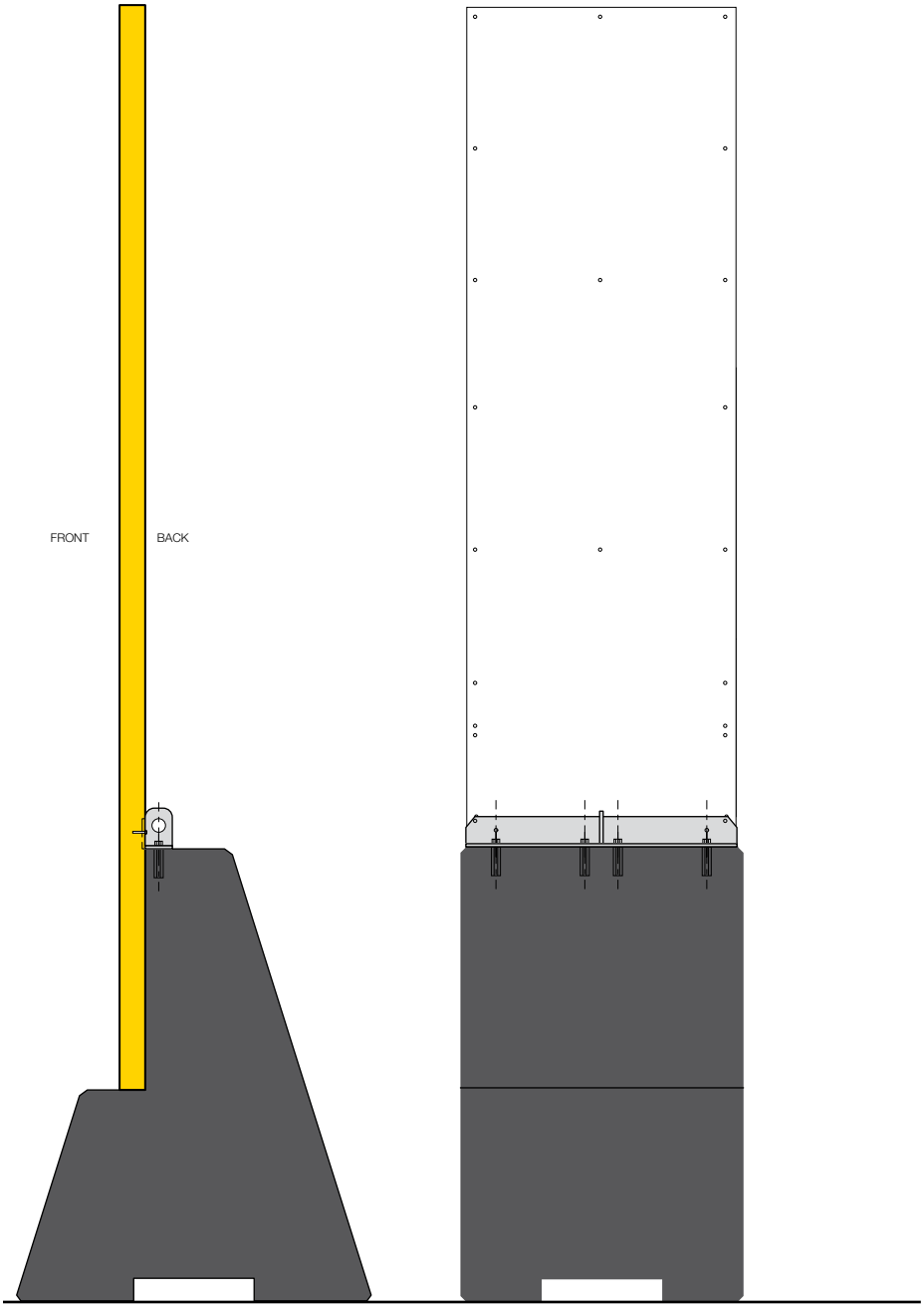

SIDE VIEW

BACK VIEW

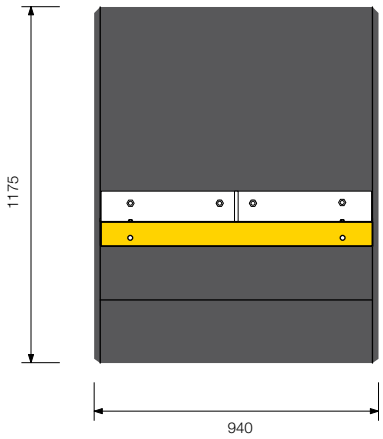

TOP VIEW

Elevations - 4m Vehicular Blade

Scale 1:20

Principle	**Section 3.4 Signage**
Graphic details: moveable blade sign	**Revision: Draft**

DESIGN INTENT ONLY

ID6

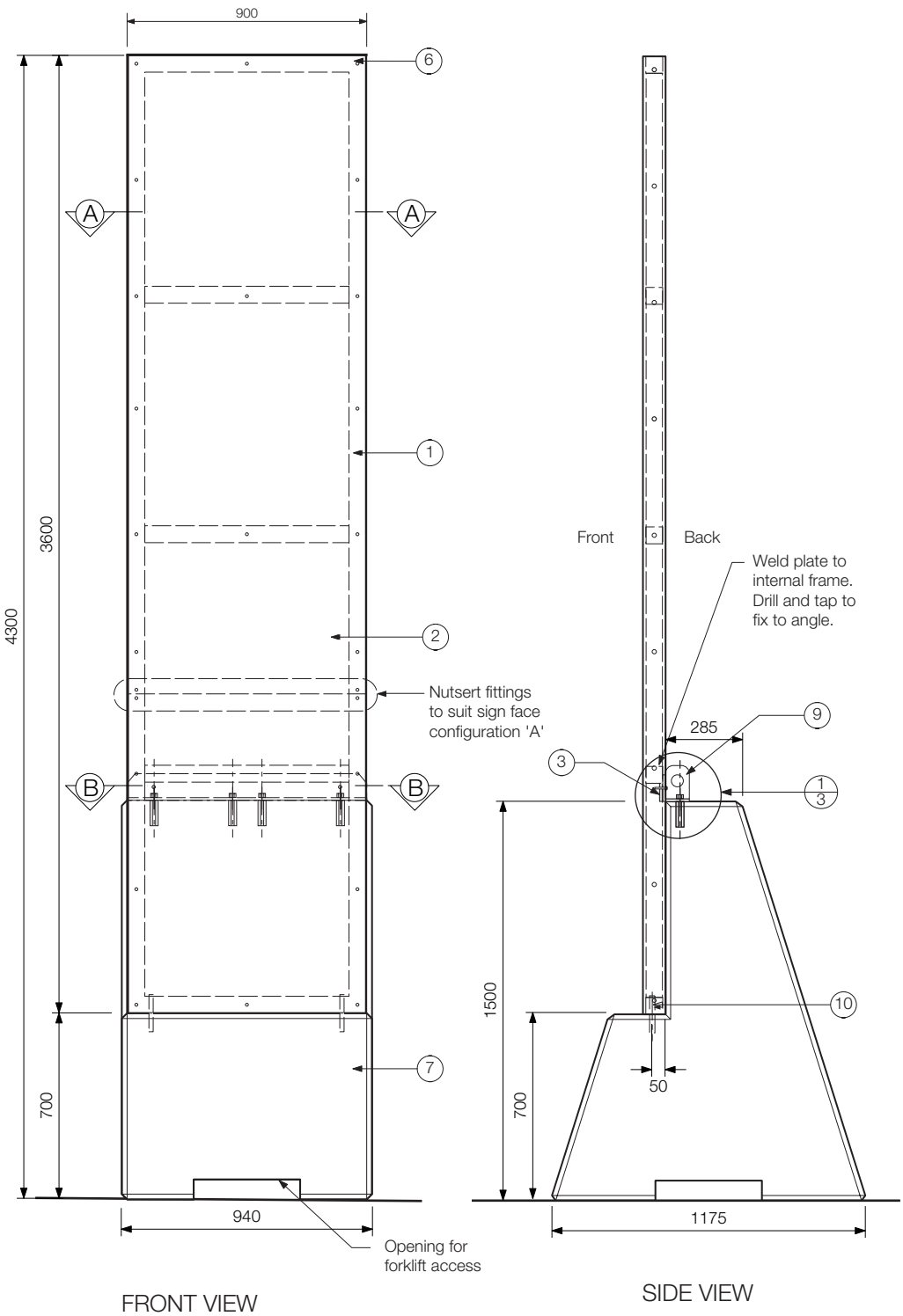

Elevations - 4m Blade Sign Base

Scale 1:25

Construction Details

Unless otherwise noted all dimensions in millimetres. Use figured dimensions in preference to scaling. Contractor to confirm all dimensions and details on site prior to manufacture.

1. Fabricated 63.5 x 63.5 x 3.5 SHS aluminium frame. Horizontal supports @900mm centres to suit panel height of cladding and to provide stiffening to the 10mm fixing plate.
2. Clad frame with 2mm thick aluminium sheet on both sides. Fix to frame via countersunk rivets as shown and paint out heads to match.
3. 10mm aluminium fixing plate welded to internal frame. Drilled and tapped to align with holes in hot dipped galvanised angle.
4. 90 x 3mm aluminium trim fixed around frame via hex socket head countersunk stainless fixings. (Enables the use of sign faces up to 10mm thick.)
5. Sign face fixed to cladded frame with pan head socket head fixings. Refer to 3788.ID1a for material options.

   Apply double sided tape to sign face to ensure neat fit to cladded frame.
6. Fit aluminium thin sheet nutsert fixings to suit sign face configurations. cabinet. Painted to match cabinet shell.

Construction Details

Unless otherwise noted all dimensions in millimetres. Use figured dimensions in preference to scaling. Contractor to confirm all dimensions and details on site prior to manufacture.

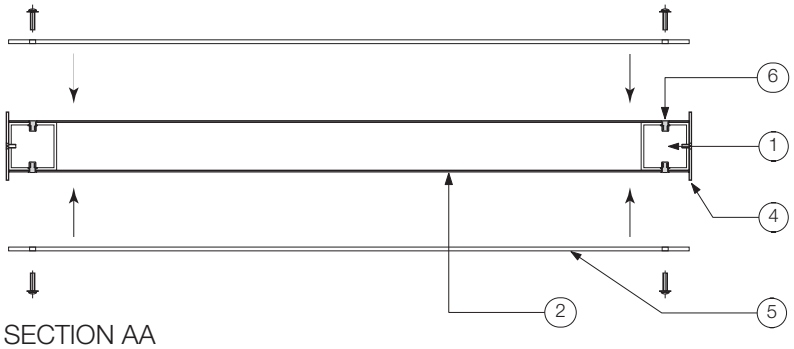

SECTION AA

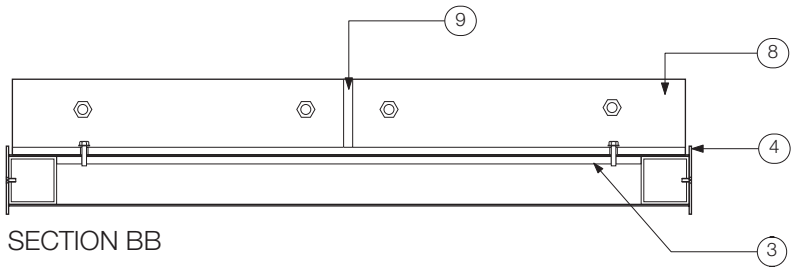

SECTION BB

Sectional Views
Scale 1:10

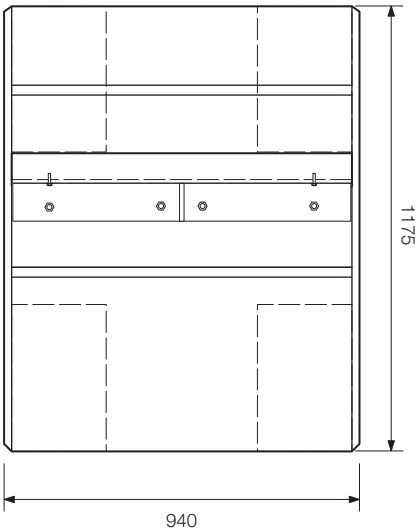

TOP VIEW

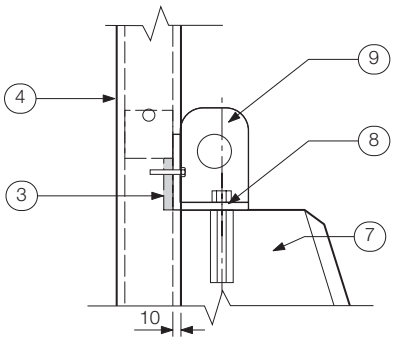

Detail 1
Scale 1:10

Construction Details

Unless otherwise noted all dimensions in millimetres. Use figured dimensions in preference to scaling. Contractor to confirm all dimensions and details on site prior to manufacture.

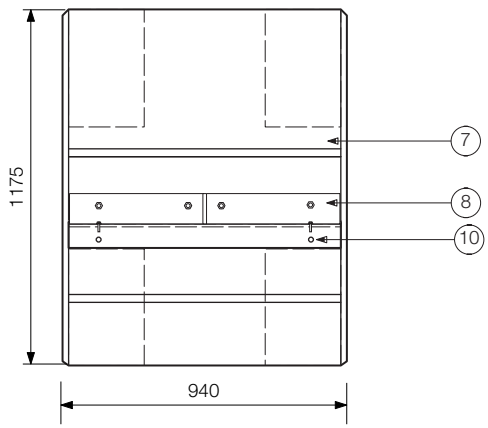

TOP VIEW

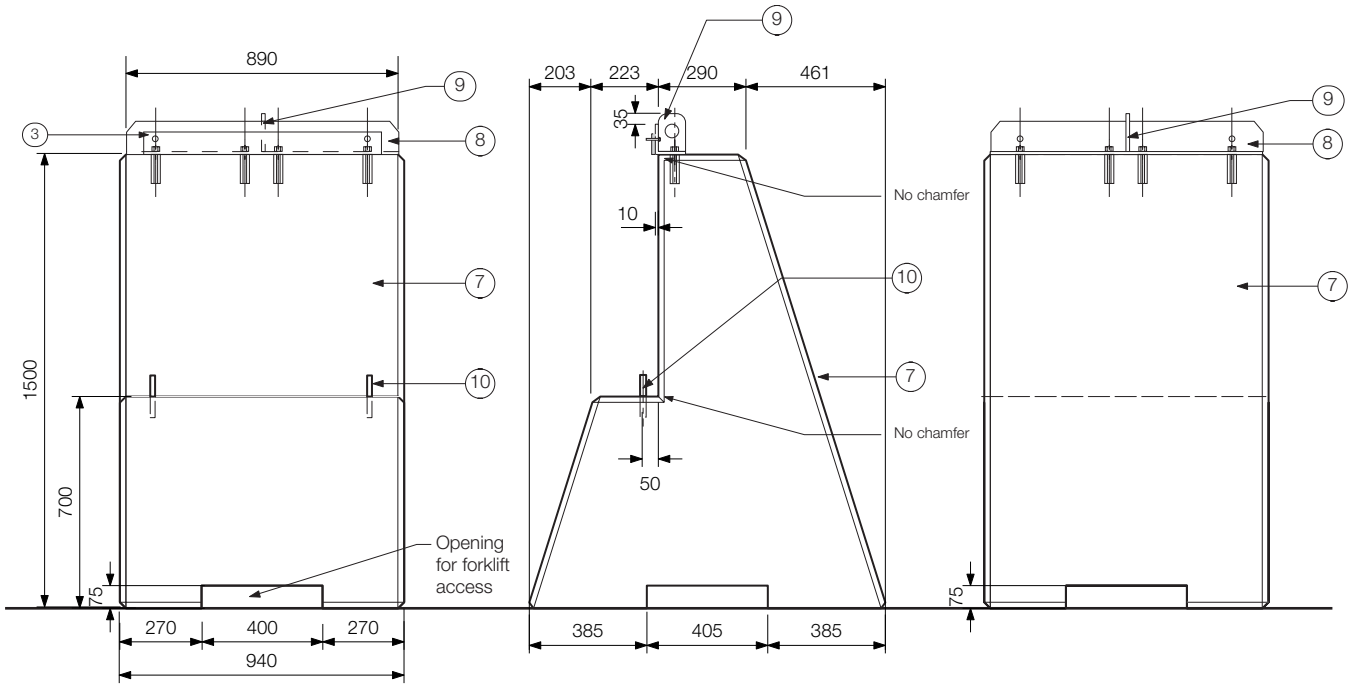

FRONT VIEW SIDE VIEW BACK VIEW

Elevations - 4m Base

Scale 1:25

Principle	Section 3.4 Signage	
Graphic details: moveable blade sign	Revision: Draft	DESIGN INTENT ONLY ID6

Duration			Graphic Applications	Production & Installation	Sign Face Material	Sheet Size (mm)	Sign Face Configuration	
1 week	3 Months	12 Months					ID1	ID2
●			Existing paper print wrapped over and taped to back.*	SOPA - CAD Department	3.6mm Exterior Grade Plywood	1220 x 2440	A	B
●			Front applied self adhesive vinyl.**	Sign Maker	5mm zz	1200 x 2400	A	B
	●	●	Front applied self adhesive vinyl.**	Sign Maker	9.5mm Weathertex	1220 x 3660	B	B
	●	●	Front applied self adhesive vinyl.**	Sign Maker	0.9 gauge colorbond	900 x 3600 (cut off roll)	B	B
		●	Front applied self adhesive vinyl.**	Sign Maker	1.2mm Aluminium	1200 x 3600	B	B

Material Matrix - material suitability based upon duration of use.
- Screw fix sign face to nutserts, allowing secure mounting and easy removal.
- When replacing sign face, consider using existing panels as a template to locate fixing holes.
- Short term sign panels to use suitable double sided tape for temporary mounting.

* Plywood sign panels can be reused several times.
** Digital print onto adhesive vinyl and / or computer cut self adhesive vinyl

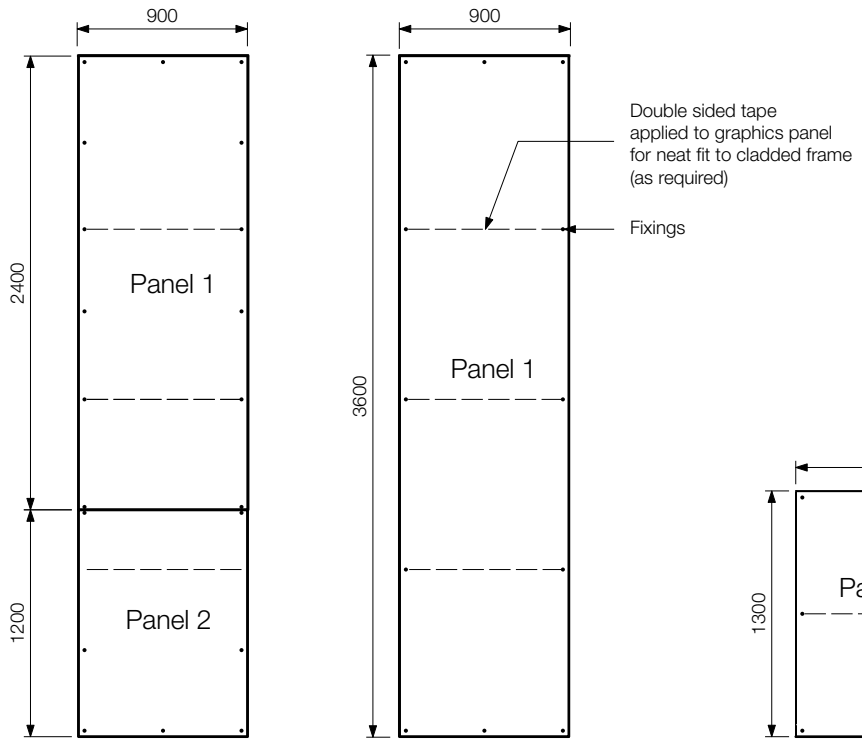

A **B** **B**

SIGN TYPE ID1 SIGN TYPE ID2

Sign Face Configurations

Not to Scale

Construction Details

Unless otherwise noted all dimensions in millimetres. Use figured dimensions in preference to scaling. Contractor to confirm all dimensions and details on site prior to manufacture.

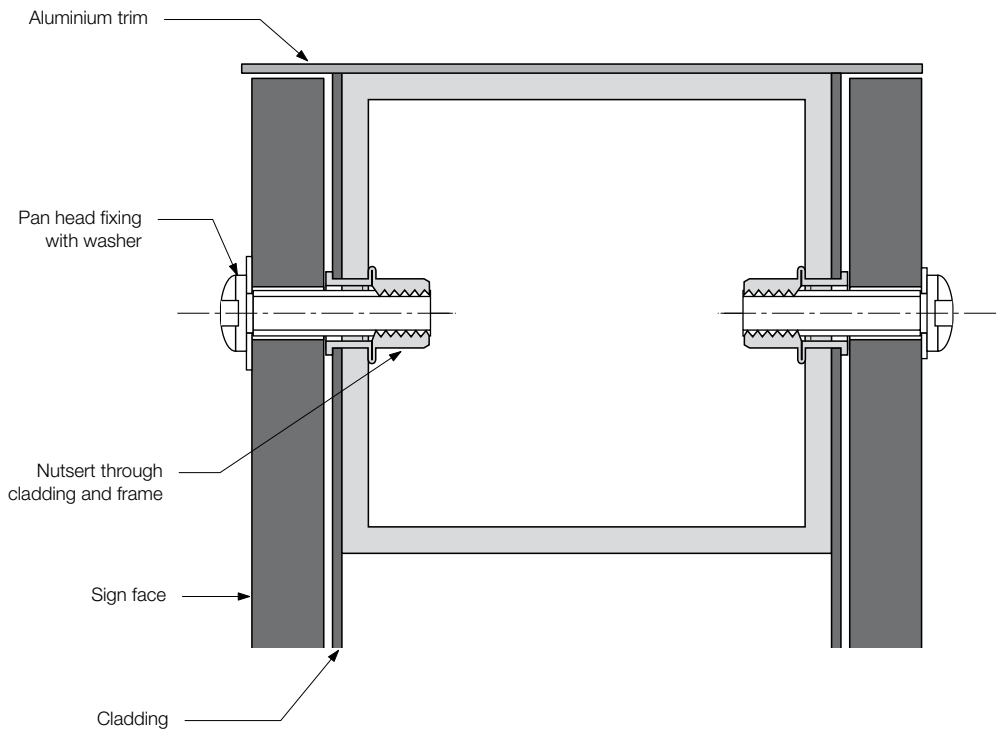

TYPICAL SECTION

Sign Face Fixing

Scale 1:1

3.4.5g Identification sign: ID7 - Moveable Map/Information Sign

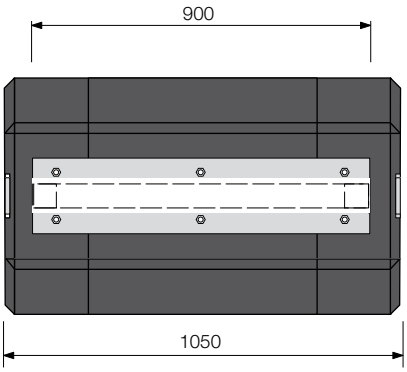

TOP VIEW

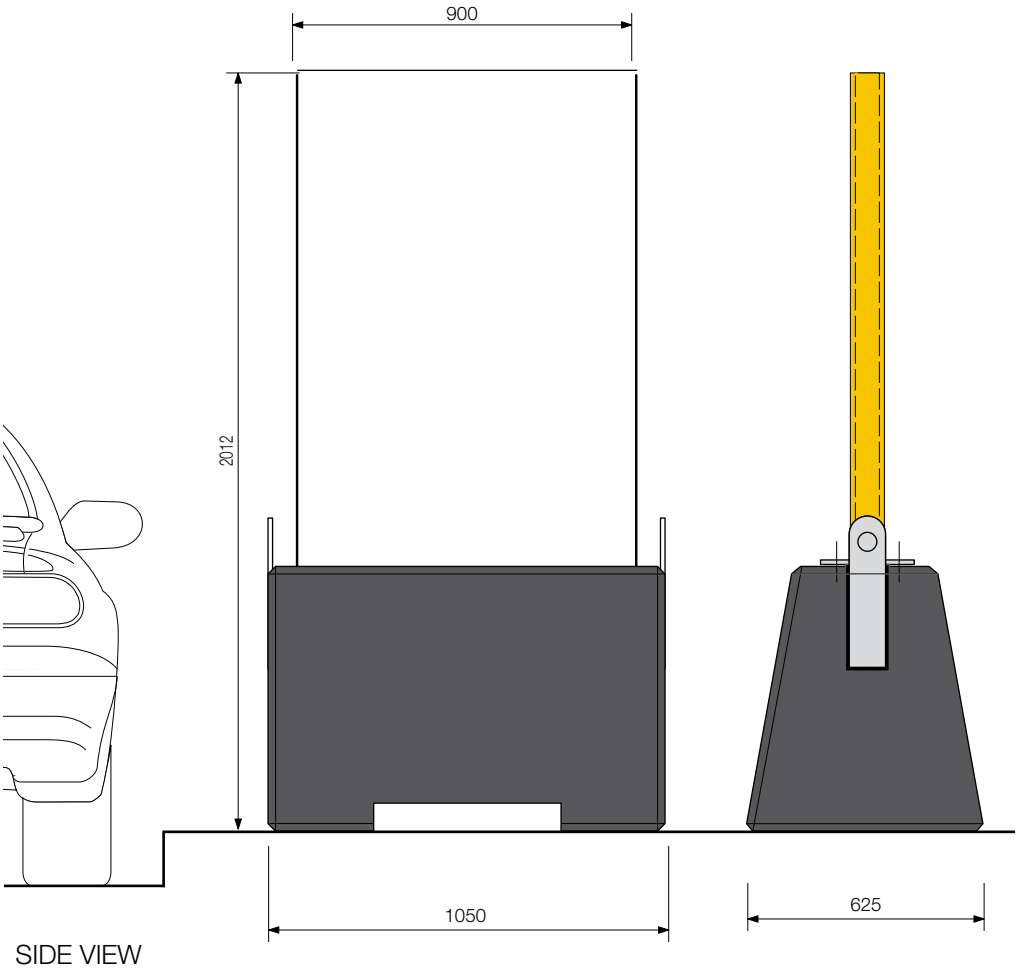

SIDE VIEW

Graphic Details

COLOUR
Cladding colour = White

Trim = Pantone 116 Yellow

Concrete colour = Concrete Colour Systems 'Panther' or equal.

Typical Locations - Directory Sign

Scale 1:20

Principle	Section 3.4 Signage
Graphic details: moveable directory/map sign	Revision: Draft

DESIGN INTENT ONLY

ID7

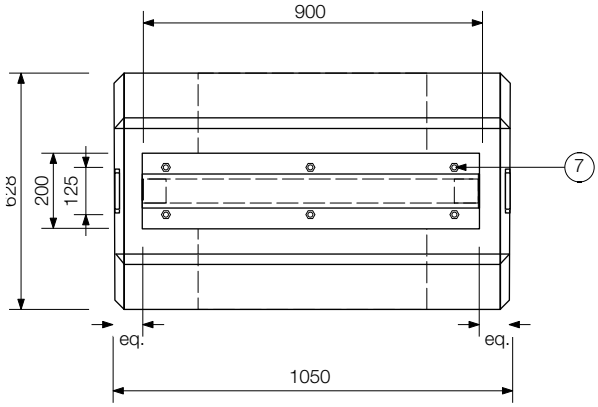

TOP VIEW

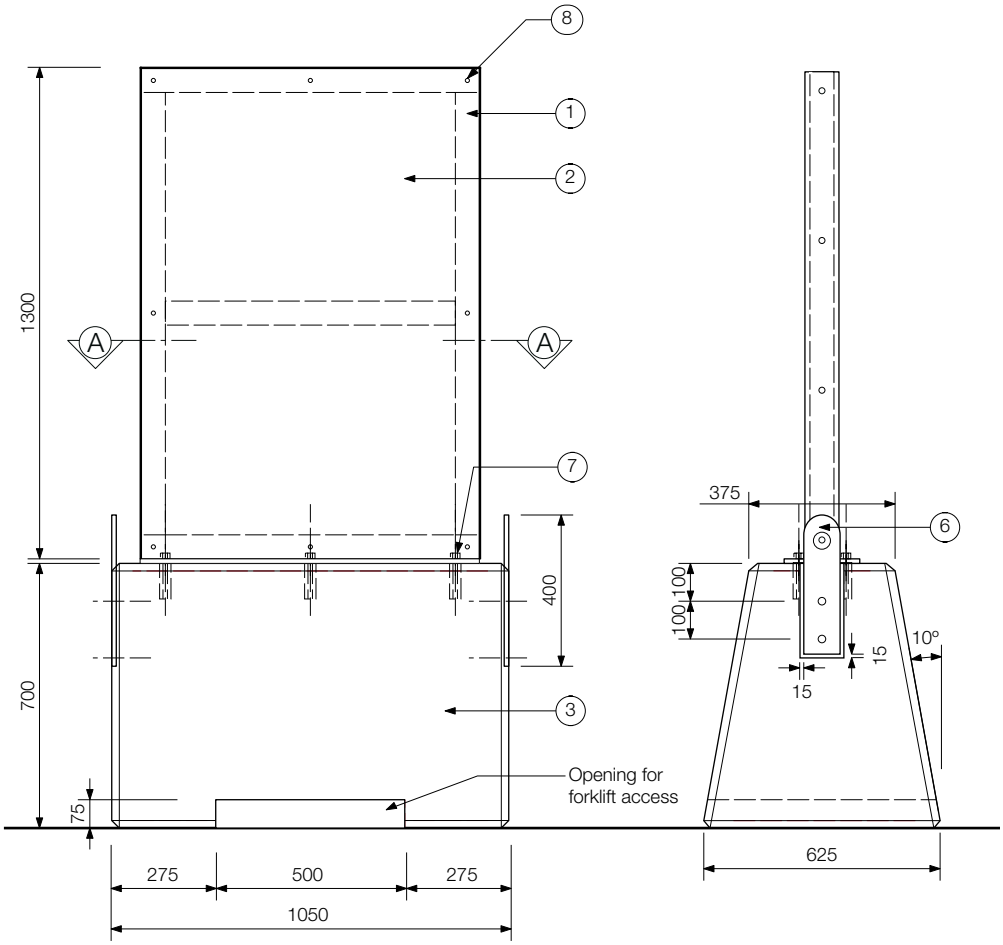

FRONT VIEW

SIDE VIEW

Contruction Details

Scale 1:20

Construction Details

Unless otherwise noted all dimensions in millimetres. Use figured dimensions in preference to scaling. Contractor to confirm all dimensions and details on site prior to manufacture.

1. 63.5 x 63.5 x 3.2 SHS aluminium frame with 12mm thick base plate welded to bottom.
2. Clad with 2mm thick aluminium sheet on both sides. Fix to frame via countersunk rivets and paint out heads to match.
3. Cast concrete base to Class 2 off form finish with a sacrificial matt clear graffiti protective coating over. Cast sockets to fix base plate. Corners bevelled 20mm to aid manufacture and to reduce damage during transportation.
4. Sign face fixed to cladded frame with pan head socket head fixings. Refer to 3788.ID1a for material options.
5. 90 x 3mm aluminium trim fixed to frame via hex socket head countersunk stainless fixings. (Enables the use of sign faces up to 10mm thick.)
6. 12 x 100mm galvanised lifting plate to sit flush into recess in concrete base. M16 counter sunk set screw fix lifting plate to cast sockets in base.
7. M16 hex head set screw fix sign frame base plate to cast sockets in base.
8. Fit aluminium thin sheet nutsert fixings through cladding and frame.

Construction Details

Unless otherwise noted all dimensions in millimetres. Use figured dimensions in preference to scaling. Contractor to confirm all dimensions and details on site prior to manufacture.

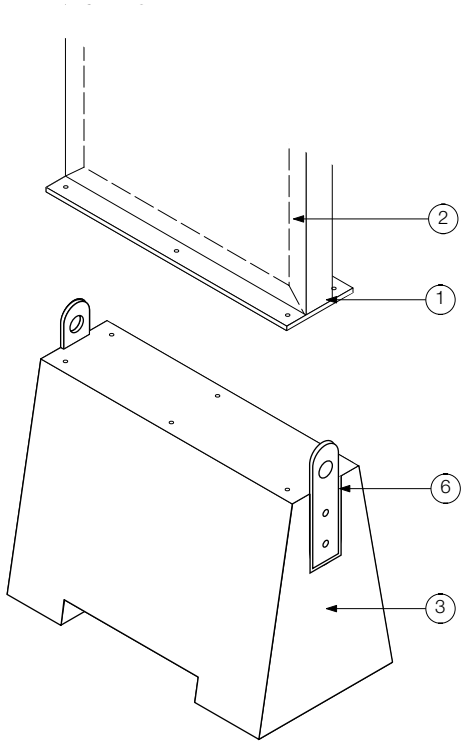

Isometric View - Indicative Sign Panel Connection

Not to Scale

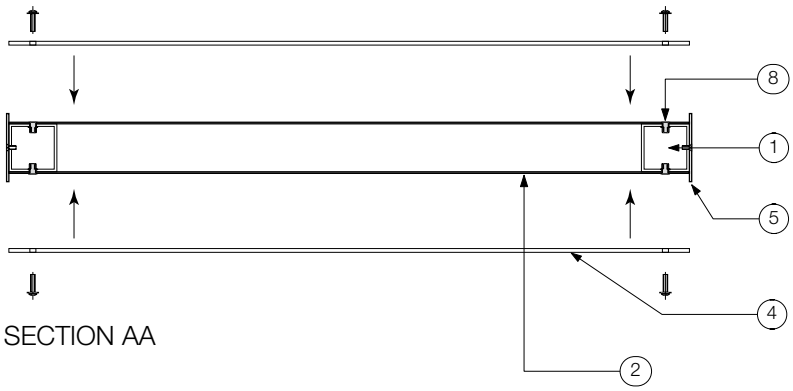

Sectional View

Scale 1:10

3.4.5c Identification sign: ID3 - Pedestrian Map/Information Sign

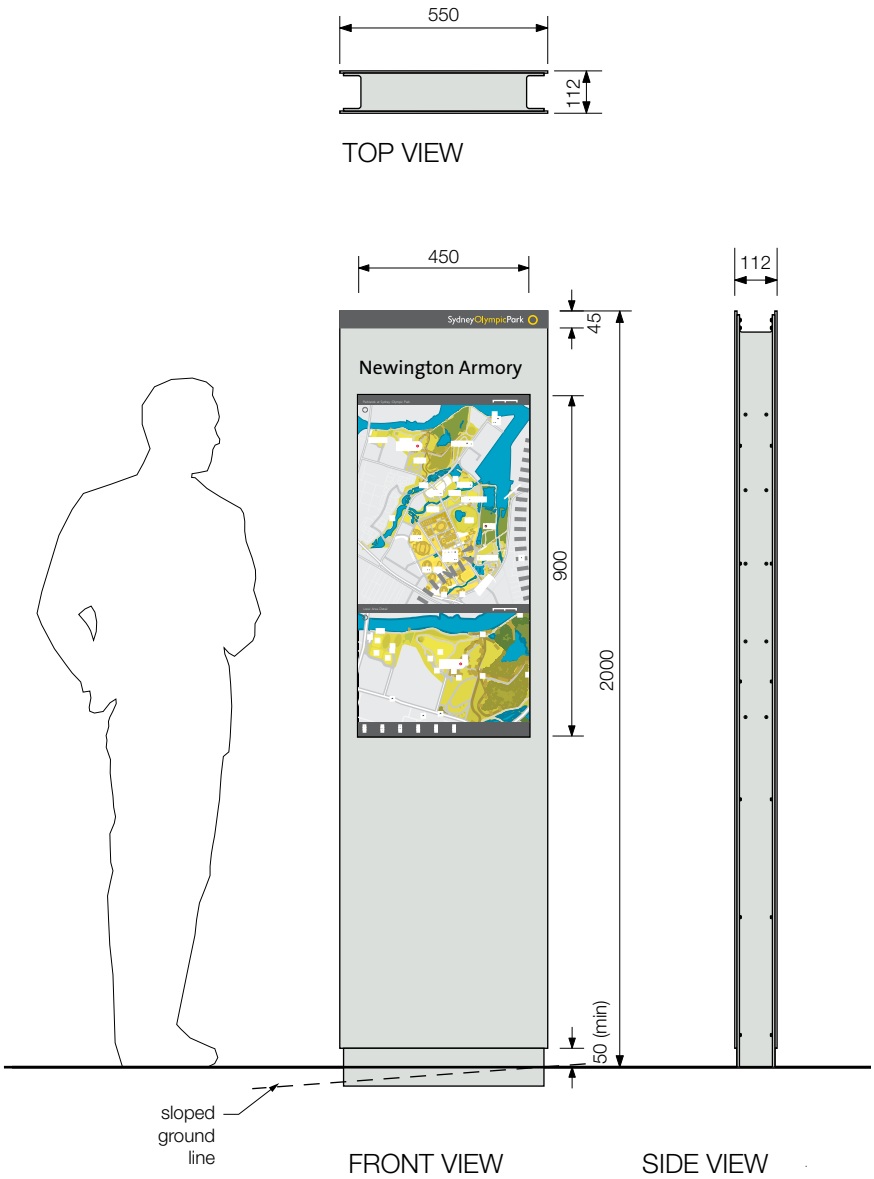

Elevations

Scale 1:20

Principle	Section 3.4 Signage
Graphic details: pedestrian map	Revision: Draft

DESIGN INTENT ONLY

ID3

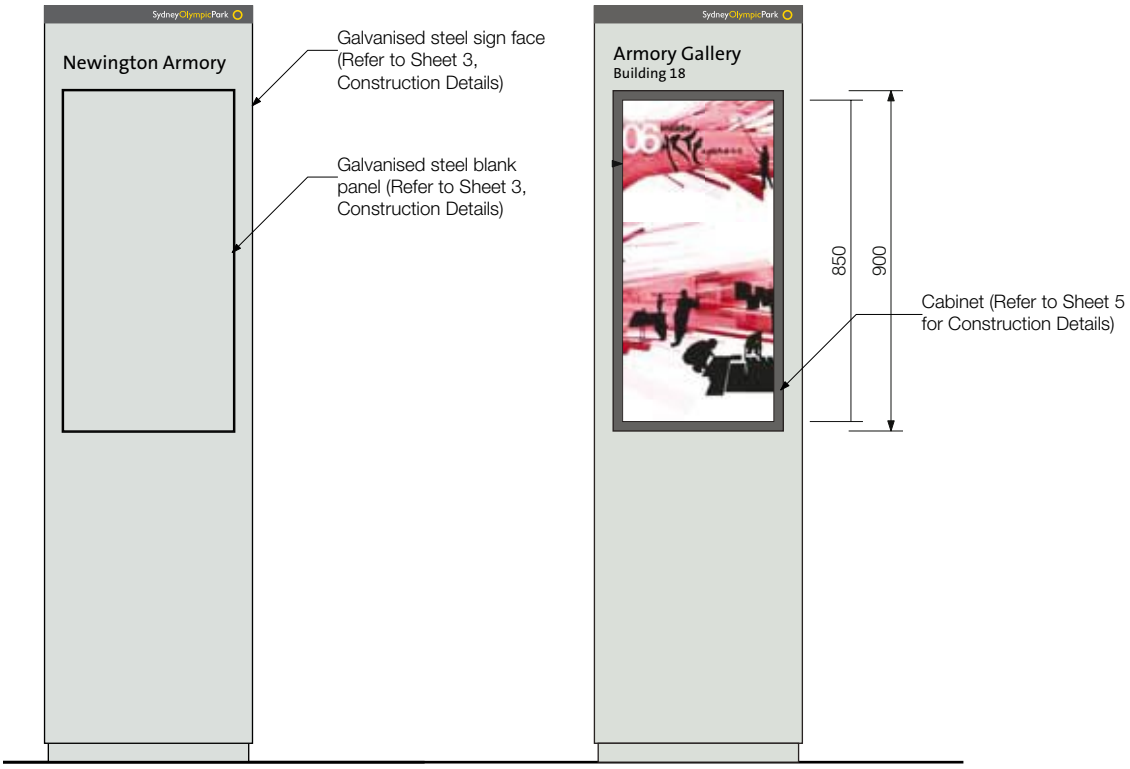

BACK (or FRONT) VIEW

2nd Map or Flat Graphic Option

Note: If the sign is located on a precinct boundary, each sign face may have a different precinct name.

BACK (or FRONT) VIEW

Cabinet Option

Graphics shown are indicative only.

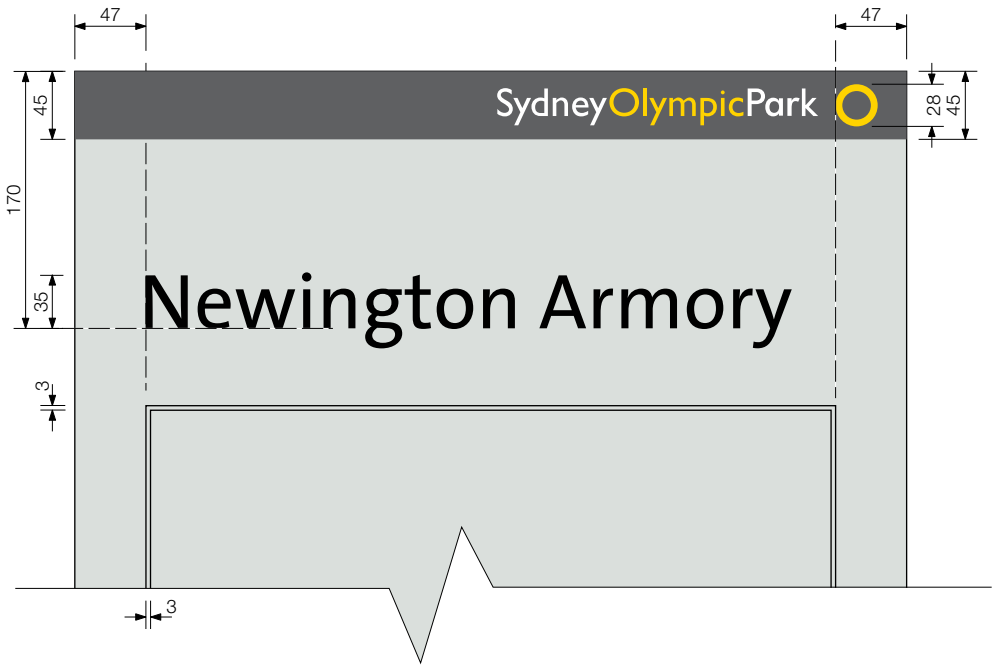

Graphic Details

FONT
The Sans Plain

SIZE
Primary Identification text = 35mm cap X height

Secondary Identification text = 26mm cap X height

COLOUR
Logo strip on sign panel = to match Dulux Western Myall

Identification text = to match Dulux Western Myall

SOPA logo = To match PMS 116C and white

Graphic Layouts - indicative

Scale 1:5

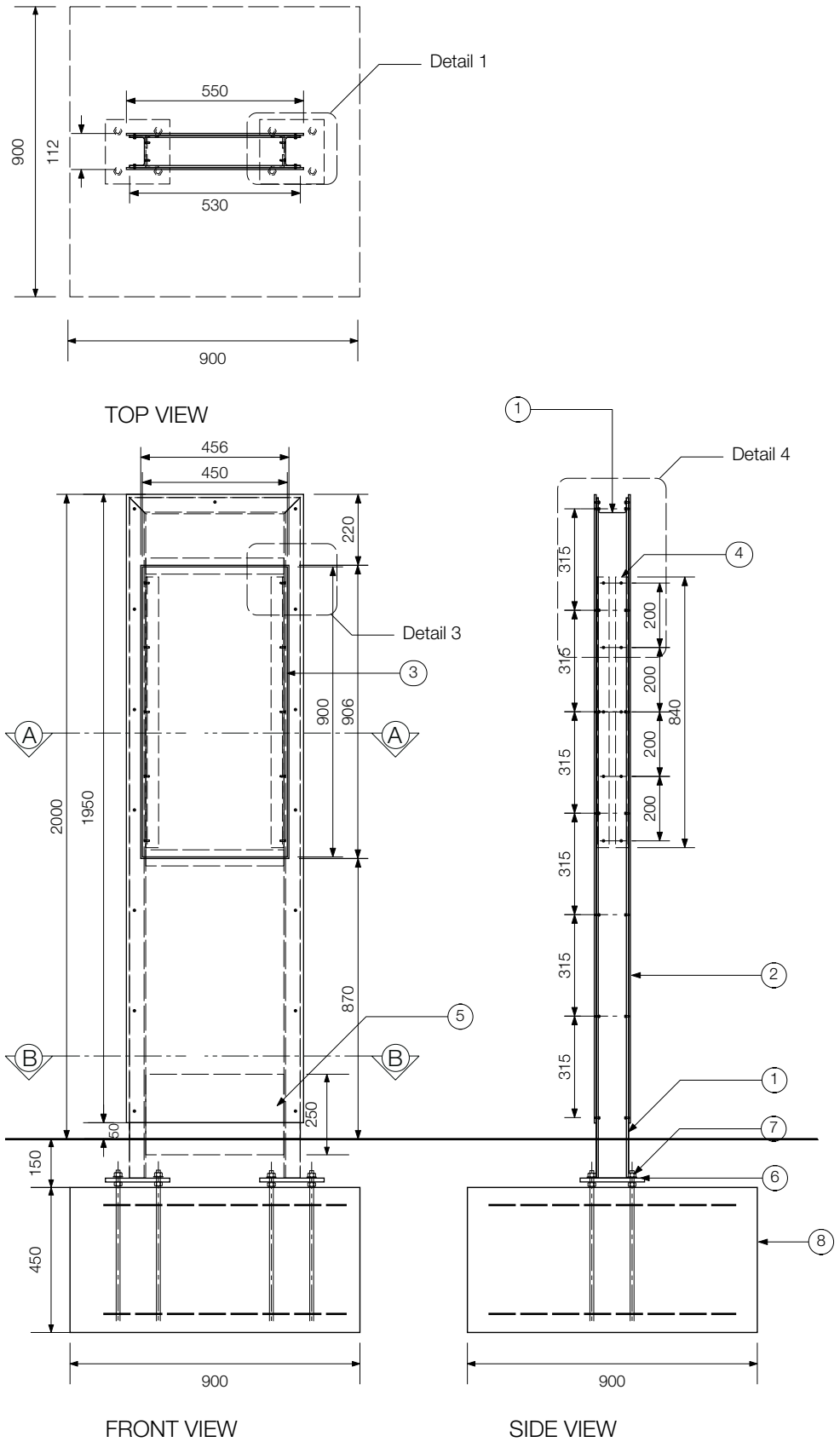

Construction Details - Footing Option 1 (Default)

Scale 1:20

Construction Details

Unless otherwise noted all dimensions in millimetres. Use figured dimensions in preference to scaling. Contractor to confirm all dimensions and details on site prior to manufacture.

1. Steel parallel flange channel (100 PFC) sign frame.
2. Sign face 6mm thick galvanised steel panel. Graphic elements (excluding map) mask & sprayed 2 pac paint. All edges to have a fine fillet to assist an even galvanised layer.
3. 5mm thick galvanised steel panel with 1mm thick aluminium map (or graphics) panel, full colour "Aluimage" (or equal, ie. digital photo anodising), adhered to front. Rear panel to be blank 5mm galvanised steel panel
4. 40 x 40 x 5mm steel angle welded to map panel (item 3) and fixed in place from outside edge of sign frame.
5. 6mm steel plate kickplate continuous welded between uprights of sign frame (and to base plate in Footing Option 2). Visible welds ground smooth, no grind marks to be visible.
6. Base plate, 16mm thick steel, FSB welded to sign frame.
7. M16 galvanised steel caged footing bolts, minimum 400mm long, with galvanised steel leveling nuts, set into concrete footing.
8. Concrete pad footing 900 x 900 x 450mm. F82 mesh top and bottom.

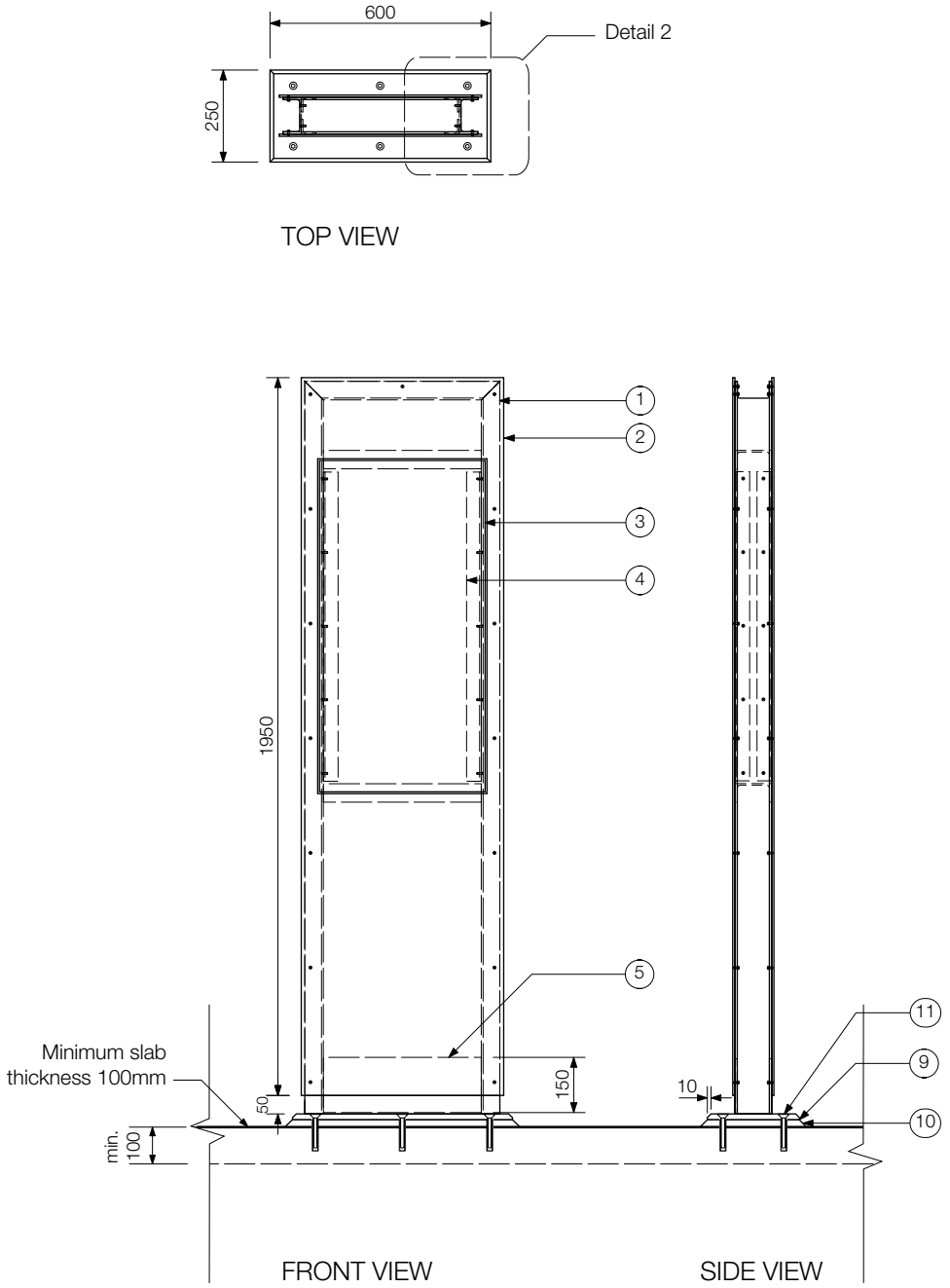

NOTE:
Fixing to existing concrete slab may only be done with the approval of SOPA.
Refer to General Construction Notes (Sheet 1) for engineers specifications.

Construction Details - Footing Option 2 (only when noted)

Scale 1:20

Construction Details

Unless otherwise noted all dimensions in millimetres. Use figured dimensions in preference to scaling. Contractor to confirm all dimensions and details on site prior to manufacture.

9. Base plate (option 2), 16mm steel thick base plate FSB welded to sign frame. 10mm at 45° beveled (top) edge.
10. Ensure sign is level and plumb with the use of packers. Finish with a cement based grout coloured to match concrete slab.
11. M12 galvanised, counter sunk socket machine screws into M12 Dyna Sets (or equal) min. 50mm embedment.
12. M5 stainless steel, button head security style, socket cap machine screws with M5 stainless steel flat washer.
13. M5 stainless steel, counter sunk, security style, socket machine screws.
14. Cabinet shell, lockable and weather resistant. Folded 2mm aluminium with welded corners. 2 pac painted to match Dulux Western Myall inside and out.
15. Cabinet glass. 6mm thick toughened glass with security film applied to the inside face, mounted on the inside of the cabinet face.
16. Cabinet hinge. Piano hinge to run the height of the cabinet. Painted to match cabinet shell.

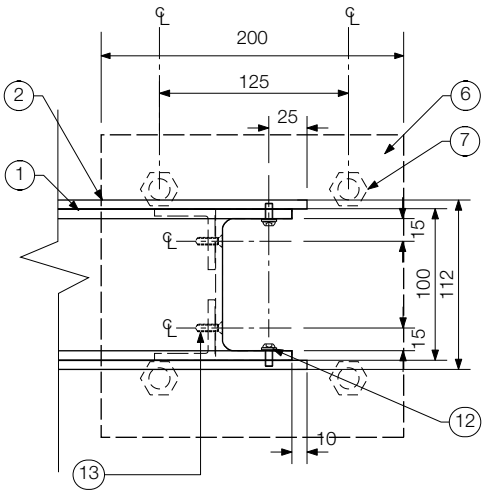

Detail 1 - with pad footing

Scale 1:5

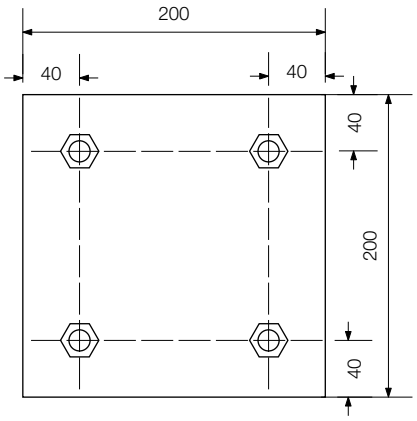

Base Plate Detail

Scale 1:5

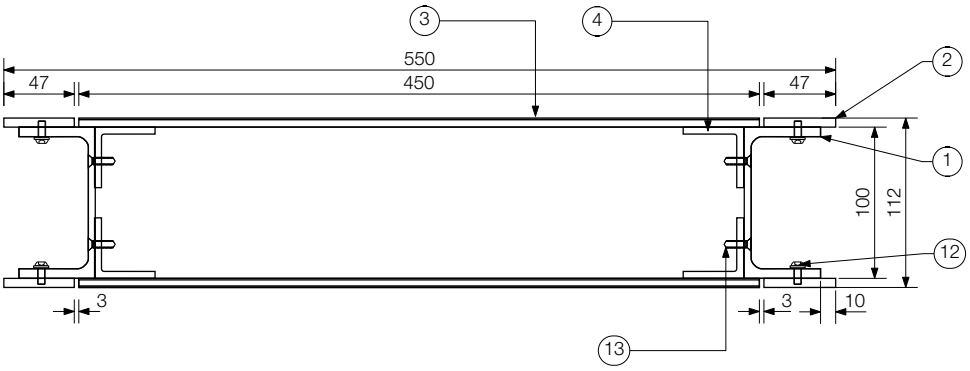

Section A-A

Scale 1:5

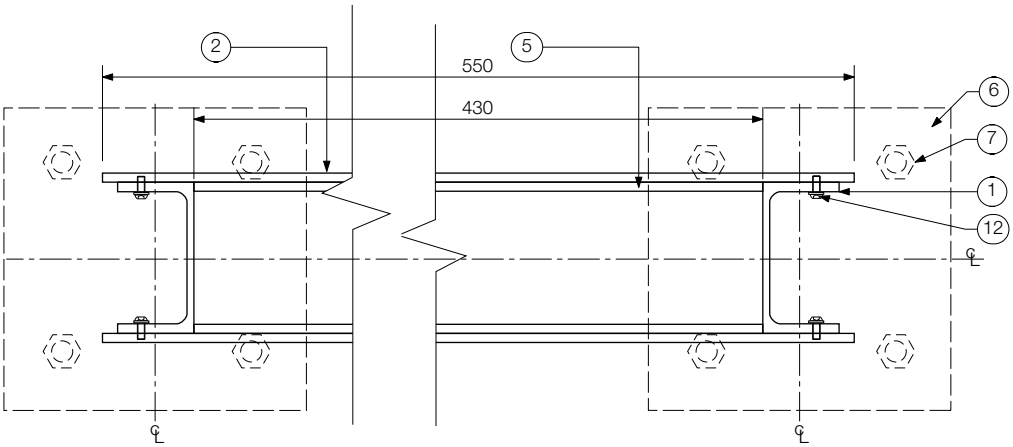

Section B-B

Scale 1:5

Construction Details

Unless otherwise noted all dimensions in millimetres. Use figured dimensions in preference to scaling. Contractor to confirm all dimensions and details on site prior to manufacture.

17. Cabinet backing plate. 5mm plate tolerances shown in section C-C are necessary for the clearance of the cabinet shell when it is being opened and closed. Painted to match cabinet shell.
18. What's On poster. Laminated poster, visible area 400 x 850mm. Allow a minimum bleed of 15mm on all sides. Laminated poster should be 430 x 880mm.
19. Magnetic poster holder adhered to poster backing board. Two magnetic strips with clear plastic sheet as hinge mechanism for the easy installation and removal of posters.
20. Poster backing board. 8mm (nom.) Thick painted to match cabinet shell, fastened to backing plate. Moisture resistant substrate (not MDF).
21. Cabinet locks. To be similar or equal to Häfele cam lock 235.72.269.
22. M5 stainless steel, counter sunk, security style, socket machine screws and nuts painted to match the cabinet shell.

Construction Details

Unless otherwise noted all dimensions in millimetres. Use figured dimensions in preference to scaling. Contractor to confirm all dimensions and details on site prior to manufacture.

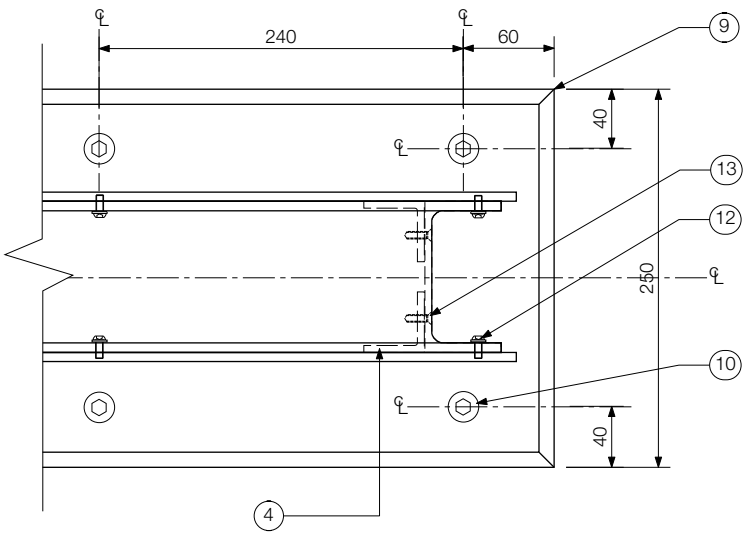

Detail 2 - fixed to top of existing slab

Scale 1:5

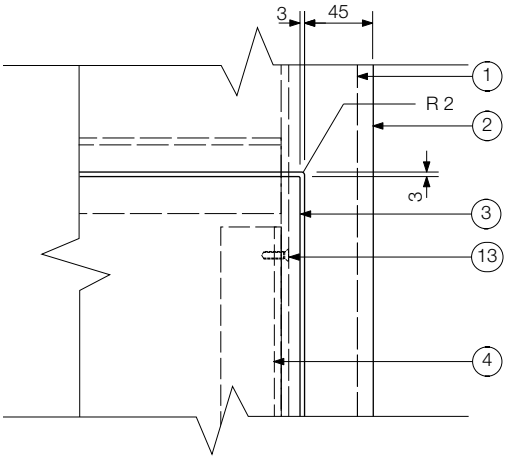

Detail 3

Scale 1:5

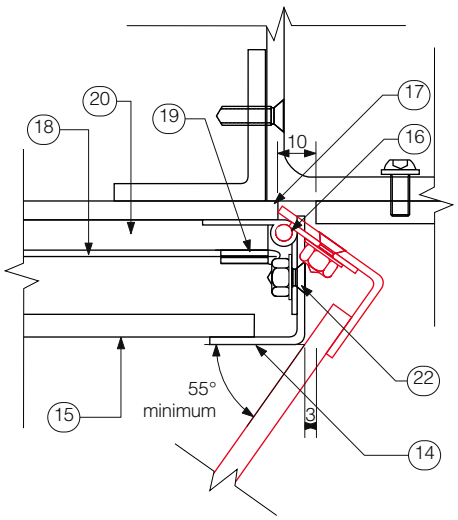

Detail 5

Scale 1:1

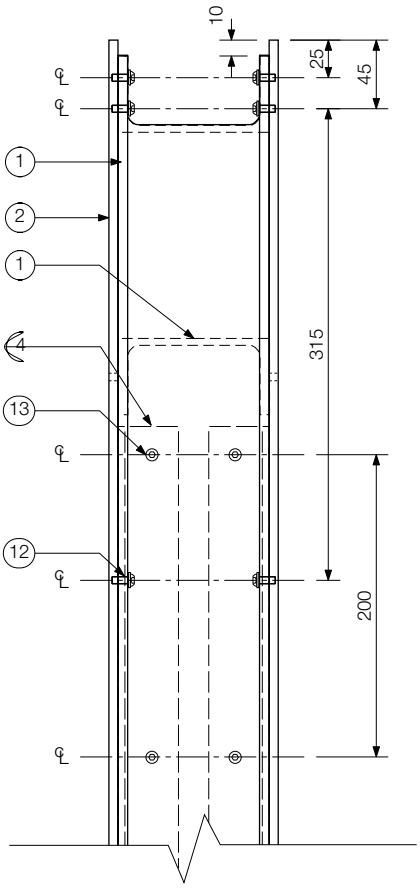

Detail 4

Scale 1:5

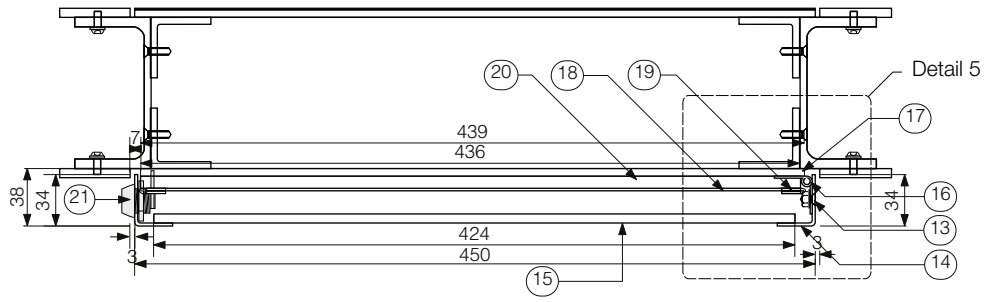

TOP VIEW

Section C-C

Scale 1:5

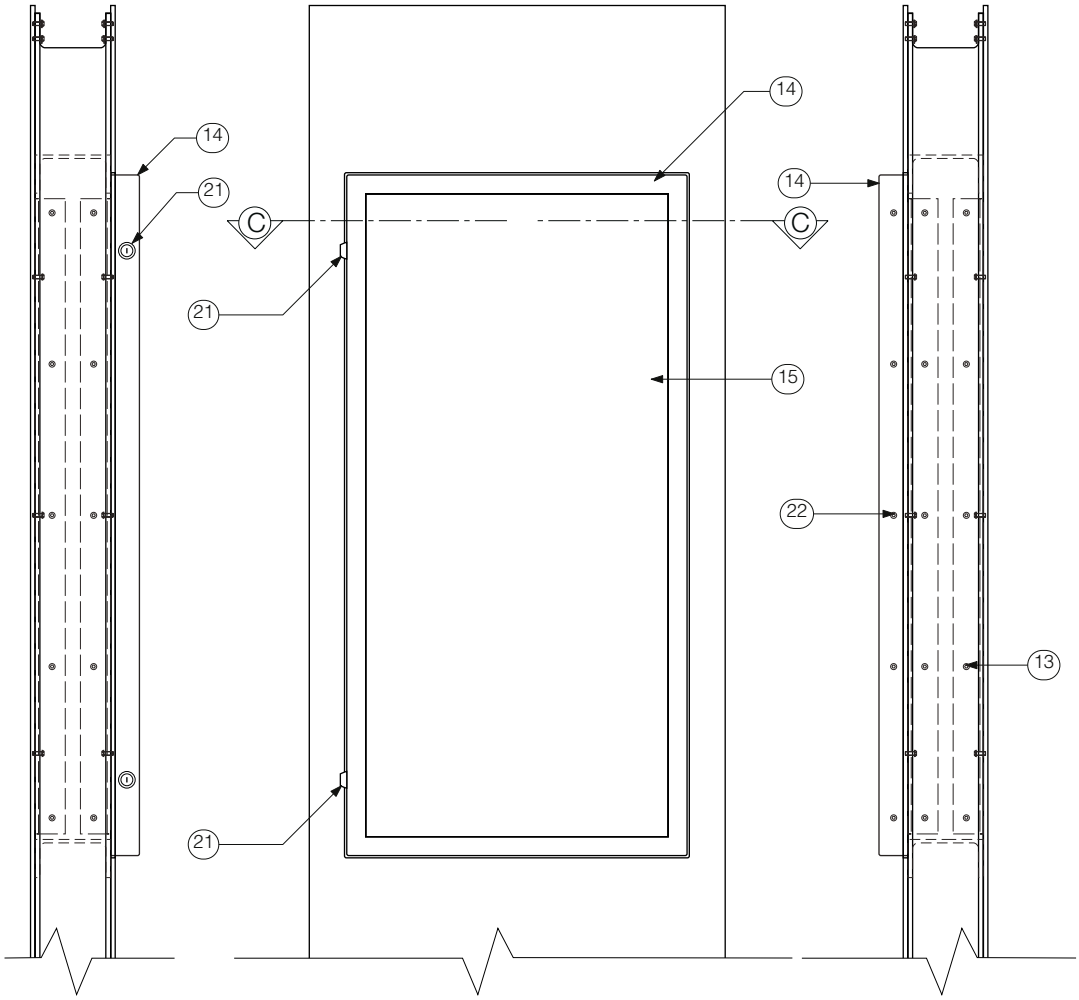

Cabinet Details

Scale 1:10

Construction Details

Unless otherwise noted all dimensions in millimetres. Use figured dimensions in preference to scaling. Contractor to confirm all dimensions and details on site prior to manufacture.

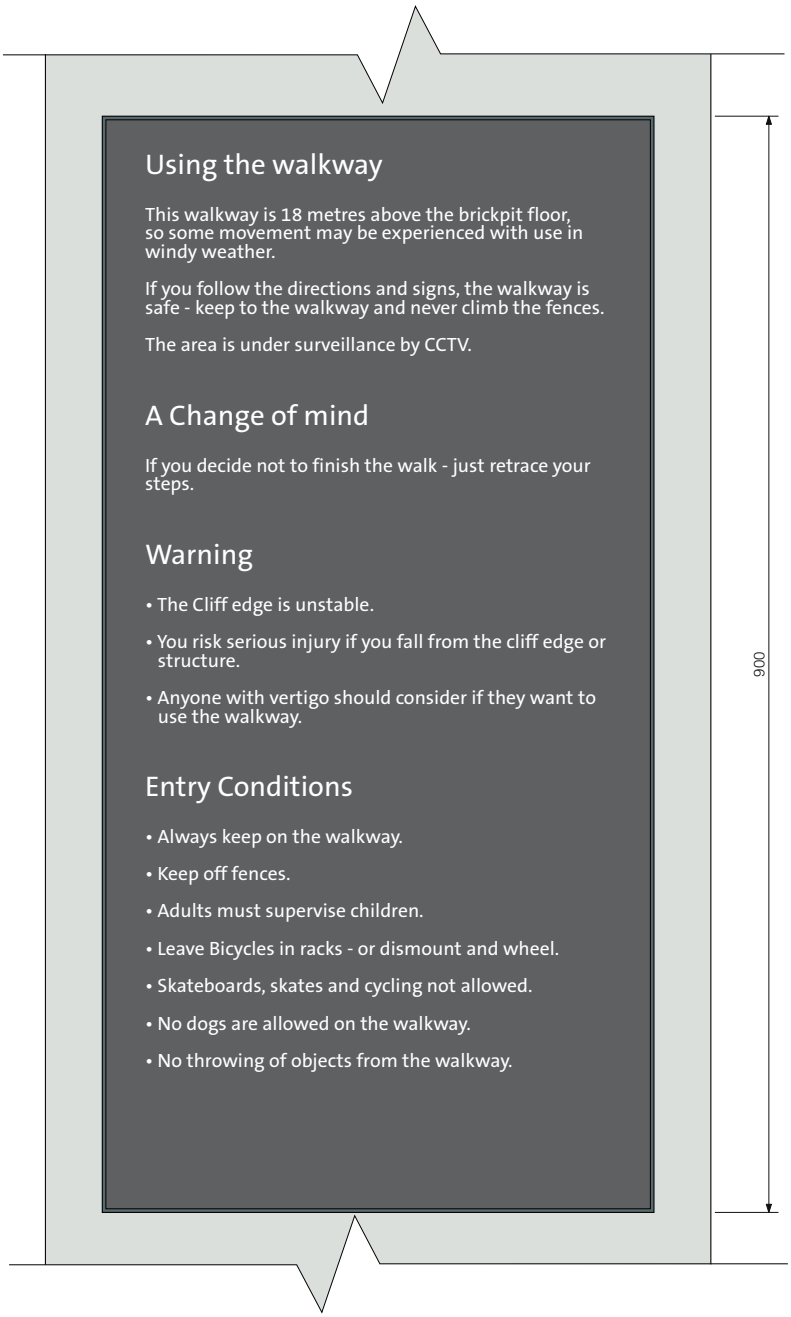

Vinyl text on 6mm aluminium panel. 3M Light Grey text with UV anti graffiti coating over entire panel. 2 pac. satin paint finish to panel.

Graphic Layout Optional Regulation text panel - Content indicative only

Scale 1:5

Graphic Details

FONT
The Sans Plain

SIZES
Headings = 16mm cap X height

Body copy = 11mm cap X height

COLOUR
Inset sign panel background = Dulux Western Myall

Regulatory text: 3M light Grey

Construction Details

Inset sign panel to be 2pac painted. Text to be applied vinyl. Silk screening or mask spray application of text is acceptable. Painted anti graffiti coating over entire panel.

For temporary term (short term sponsorship (1.5 years)) digitally printing is acceptable.

3.4.5b Identification sign: ID2 - Pedestrian Arrival

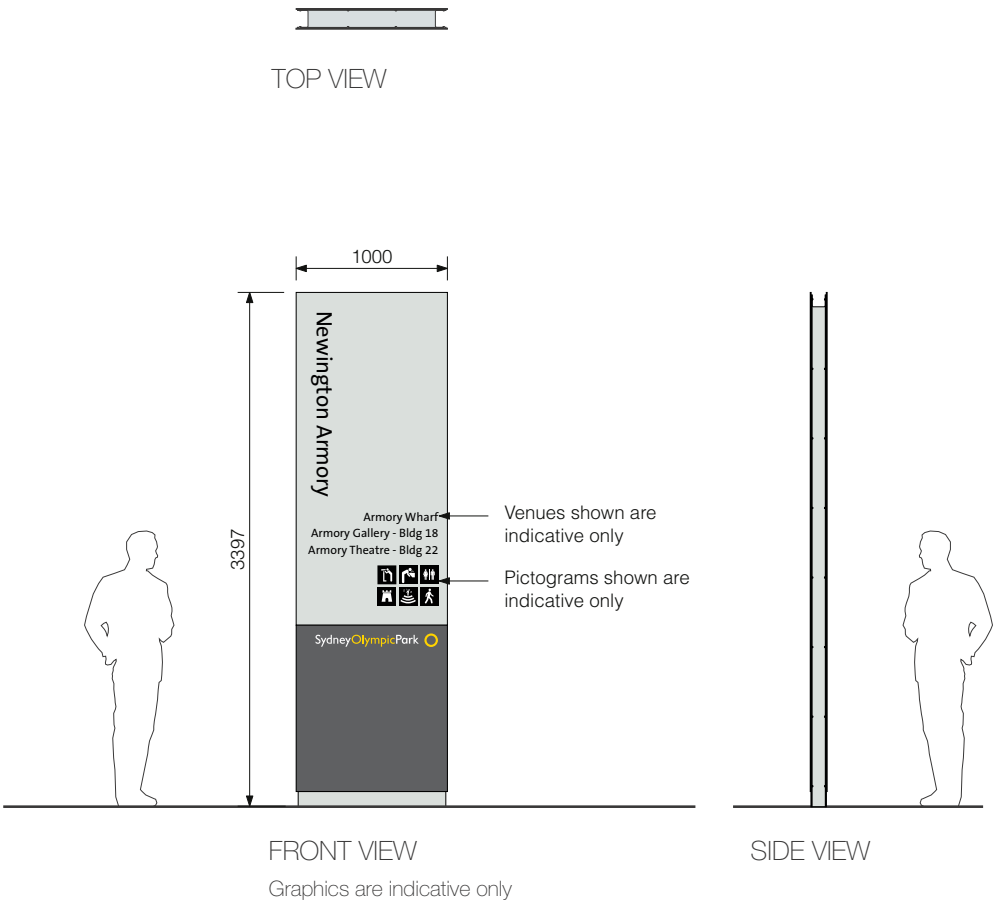

Elevations

Scale 1:50

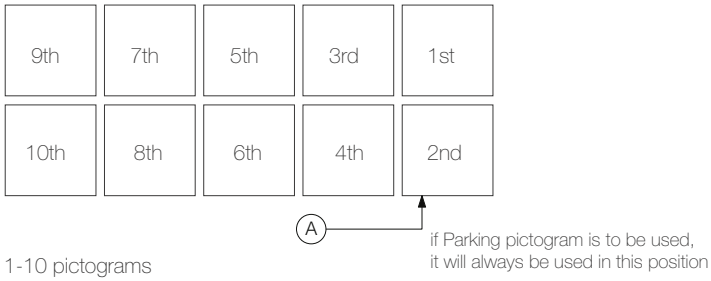

1-10 pictograms

Pictogram Placement Priority

Not to Scale

Principle	Section 3.4 Signage	
Graphic details: pedestrian arrival sign	Revision: Draft	DESIGN INTENT ONLY ID2

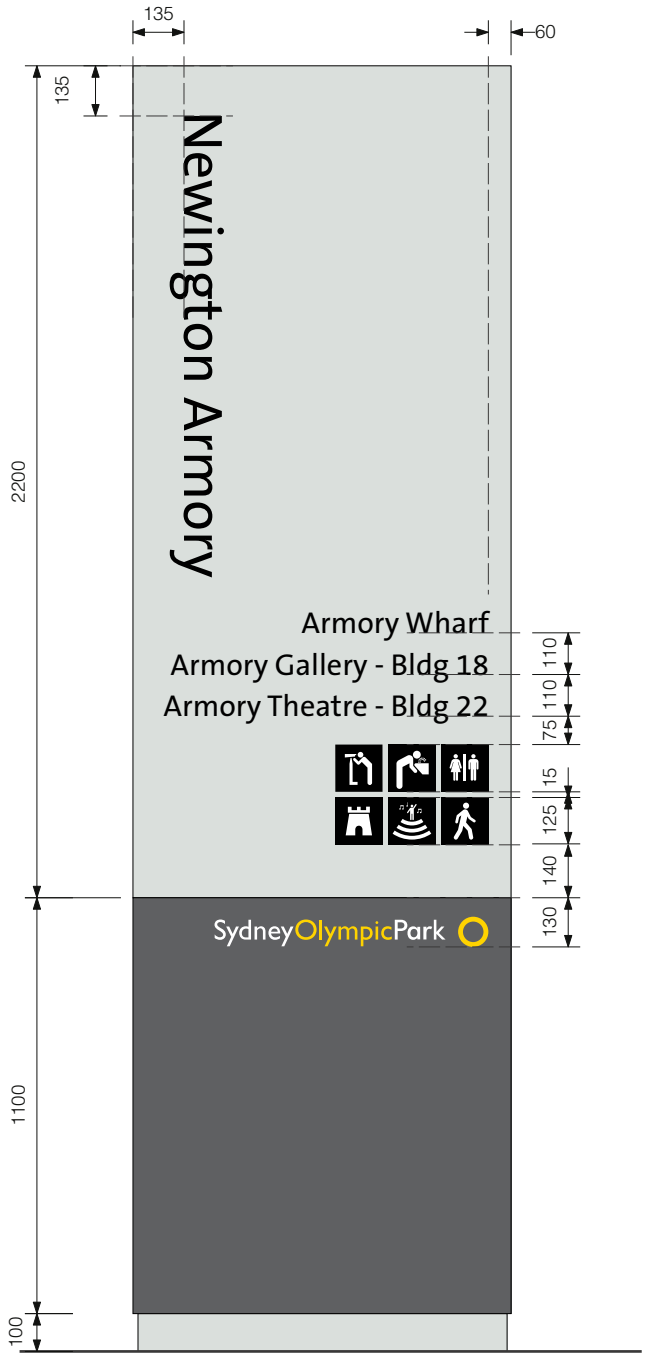

Graphic Layout

Scale 1:20

Graphic Details

FONT
The Sans Plain

SIZES
Primary Name = 100mm cap X height

Internal site names = 54mm cap X height

Pictograms = 125 x 125mm

Logo "circle" = 80mm

COLOUR
Lower sign panel background = To match Dulux Western Myall

Upper sign panel background = Dulux Industrial Metal Shield Hammer Finish Silver

Pictograms (general) = Black and White

parking pictogram (where required)= To match Pantone 653C

SOPA Logo = Pantone 116C and White

Text = Black

Construction Details

Unless otherwise noted all dimensions in millimetres. Use figured dimensions in preference to scaling. Contractor to confirm all dimensions and details on site prior to manufacture.

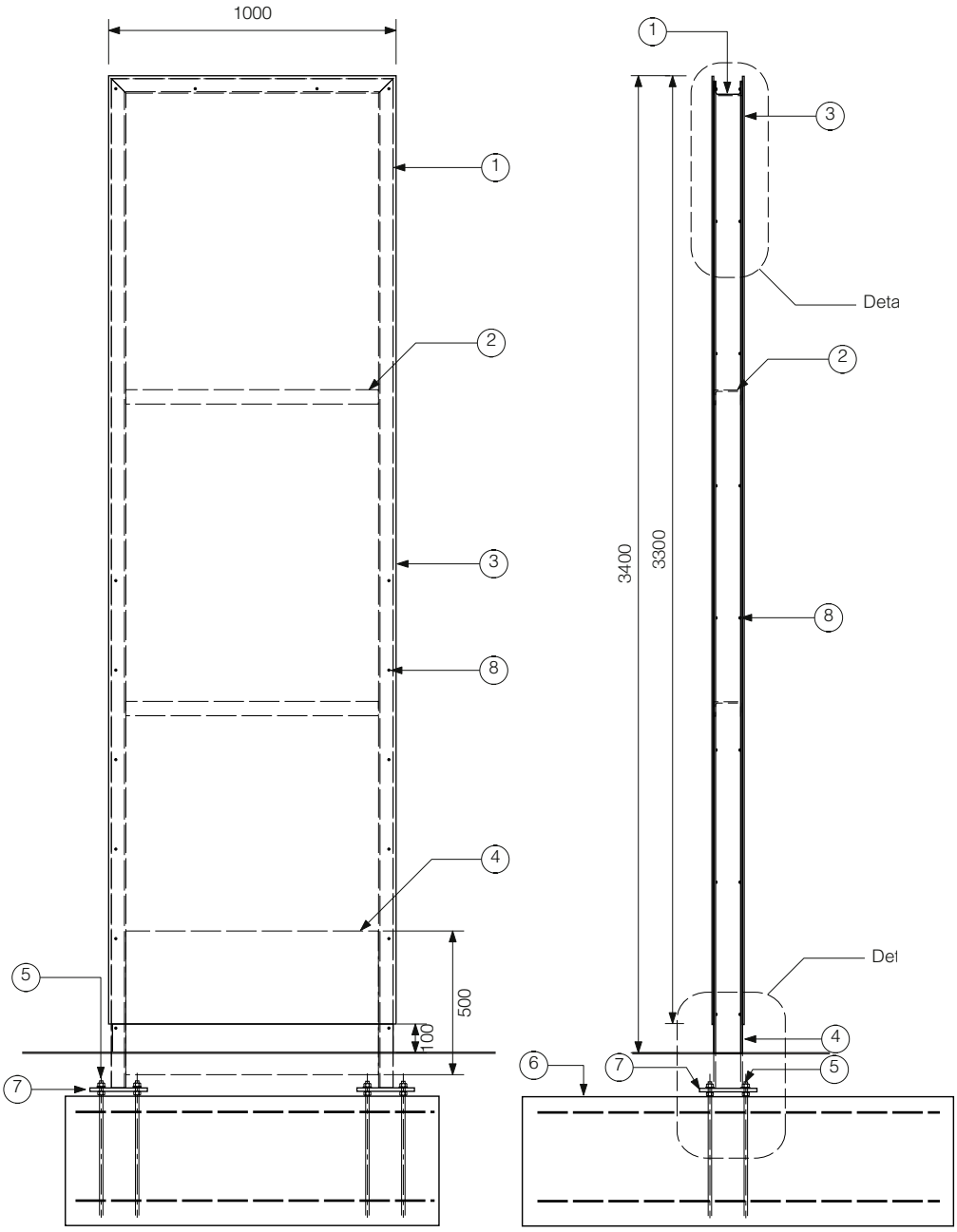

FRONT VIEW

SIDE VIEW

Construction Details - elevations

Scale 1:25

1. Sign frame, steel parallel flange channel (100 PFC) with mitre joins in corners.
2. Cross members, steel, FSB welded to flange channel.
3. Sign panel, 6mm thick Aluminium. All edges of panel to have a 1mm radius fillet to facilitate the best paint coverage. Graphic elements mask & sprayed 2 pac paint.
4. Kickplate, 6mm steel plate continuous welded between uprights of sign frame. Visible welds ground smooth, no angle grind marks to be visible. It should appear as one piece of metal.
5. Galvanised steel caged footing bolts, with galvanised steel leveling nuts, set into concrete footing, to the signmaker's engineer specifications.
6. Concrete pad footing to the signmaker's engineer specifications. F82 mesh top and bottom.
7. 25mm thick steel base plate FSB welded to sign frame.
8. M6 stainless steel, security style, button head socket cap machine screws, to fix sign panel to channel flange. At equal centres.

Construction Details

Unless otherwise noted all dimensions in millimetres. Use figured dimensions in preference to scaling. Contractor to confirm all dimensions and details on site prior to manufacture.

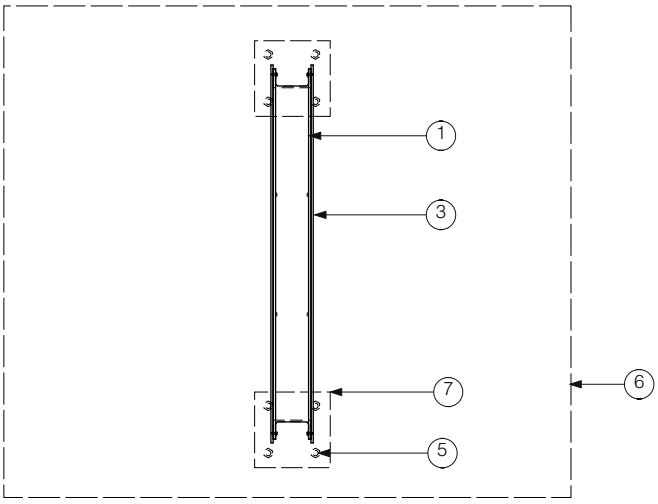

Construction Details - top view

Scale 1:20

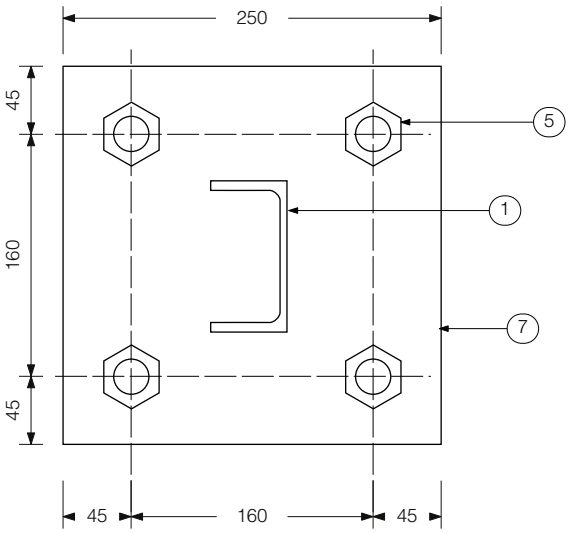

TOP VIEW

Base Plate Detail

Scale 1:5

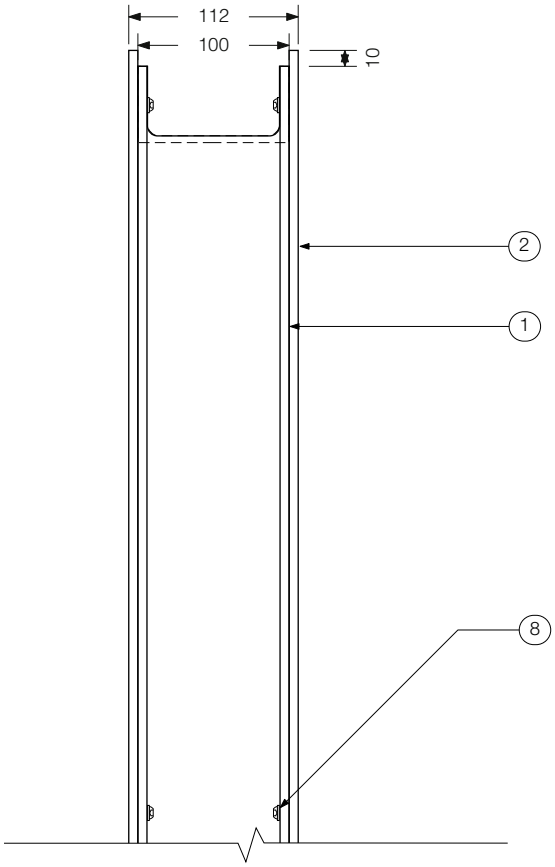

SIDE VIEW

Detail 1

Scale 1:5

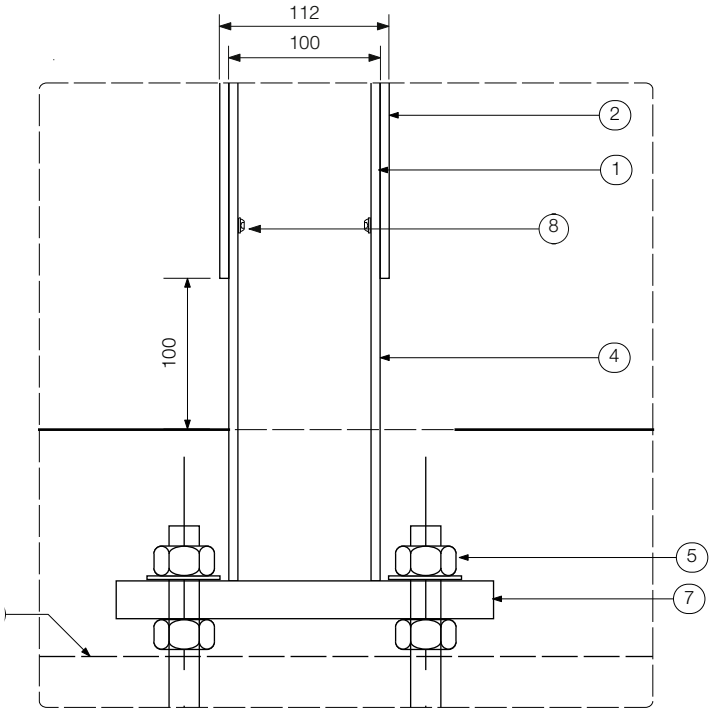

SIDE VIEW

Detail 2

Scale 1:5

Construction Details

Unless otherwise noted all dimensions in millimetres. Use figured dimensions in preference to scaling. Contractor to confirm all dimensions and details on site prior to manufacture.

3.4.5a Identification sign: ID1 - Vehicle Arrival

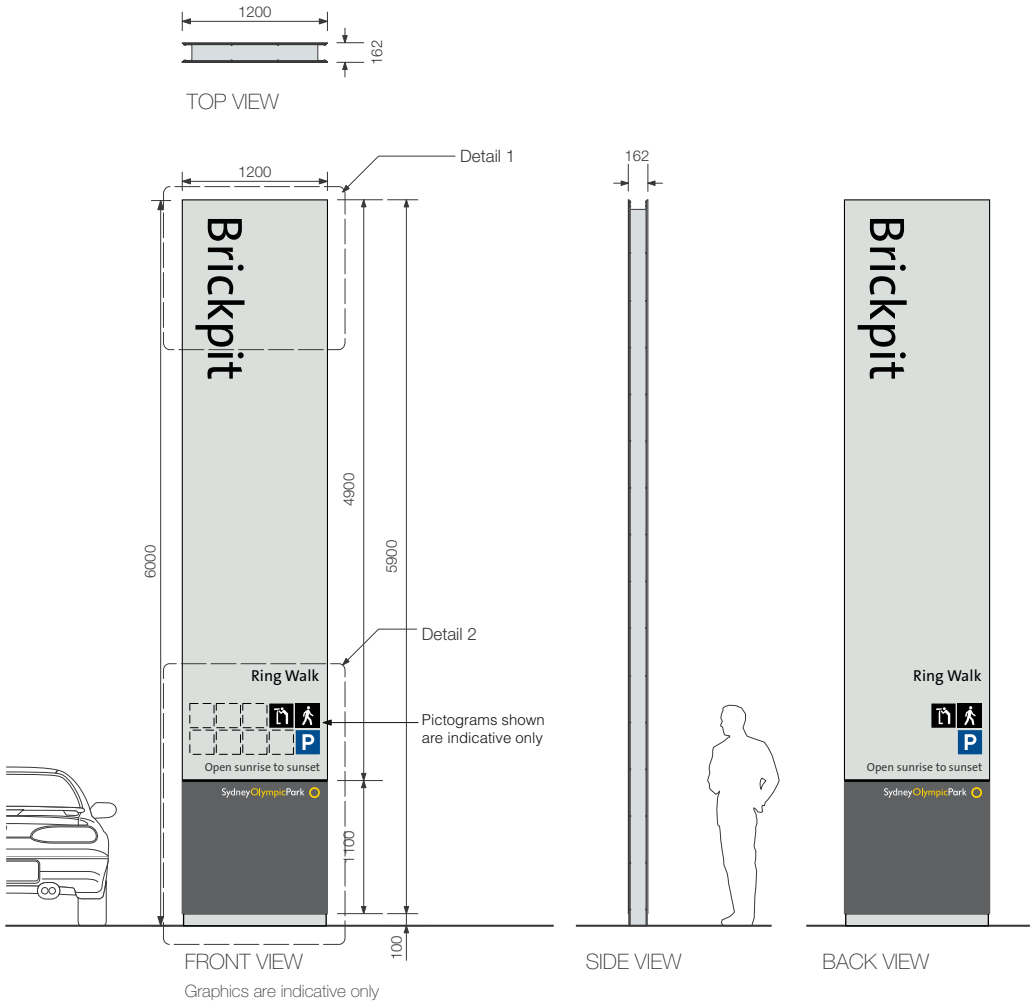

Elevations
Not to Scale

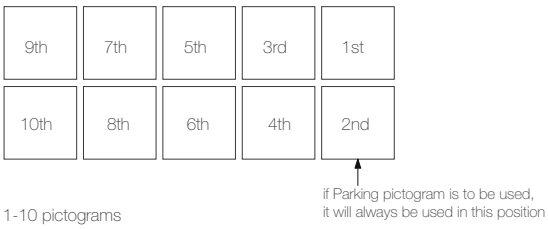

Pictogram Placement Priority
Not to Scale

Principle	Section 3.4 Signage
Graphic details: vehicle arrival sign	Revision: Draft

DESIGN INTENT ONLY

ID1

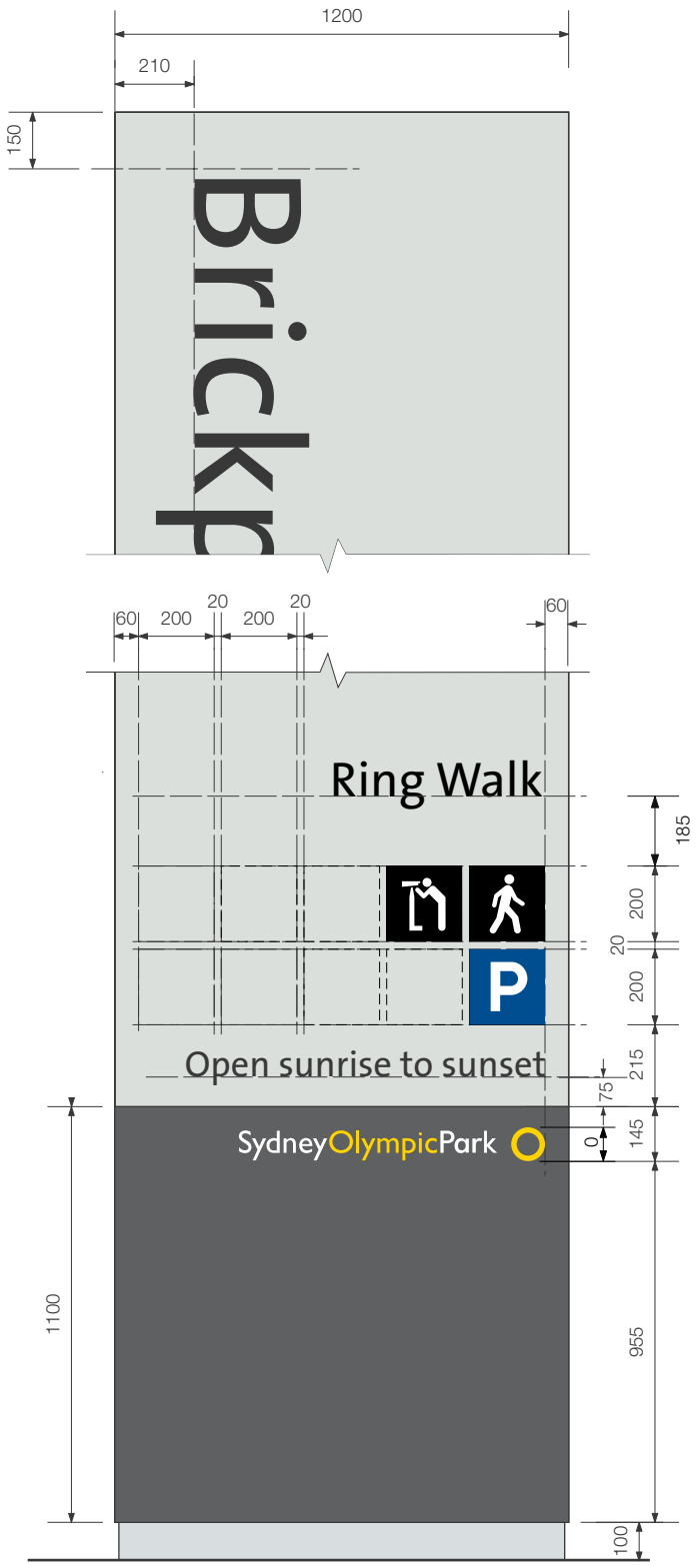

Detail 1 and Detail 2 - Graphic Layout
Scale 1:20

Graphic Details

FONT
The Sans Plain

SIZES
Park Name = 280mm cap X height

Internal site names = 83mm cap X height

"Open sunrise to Sunset" text = 65mm cap X height

Pictograms = 200 x 200mm

Logo "circle" = 90mm

COLOUR
Lower sign panel background = To match Dulux Western Myall

Upper sign panel background = Dulux Industrial Metal Shield Hammer Finish Silver

Pictograms (general) = Black and White

parking pictogram = To match Pantone 653C

SOPA Logo = Pantone 116C and White

Text = Black

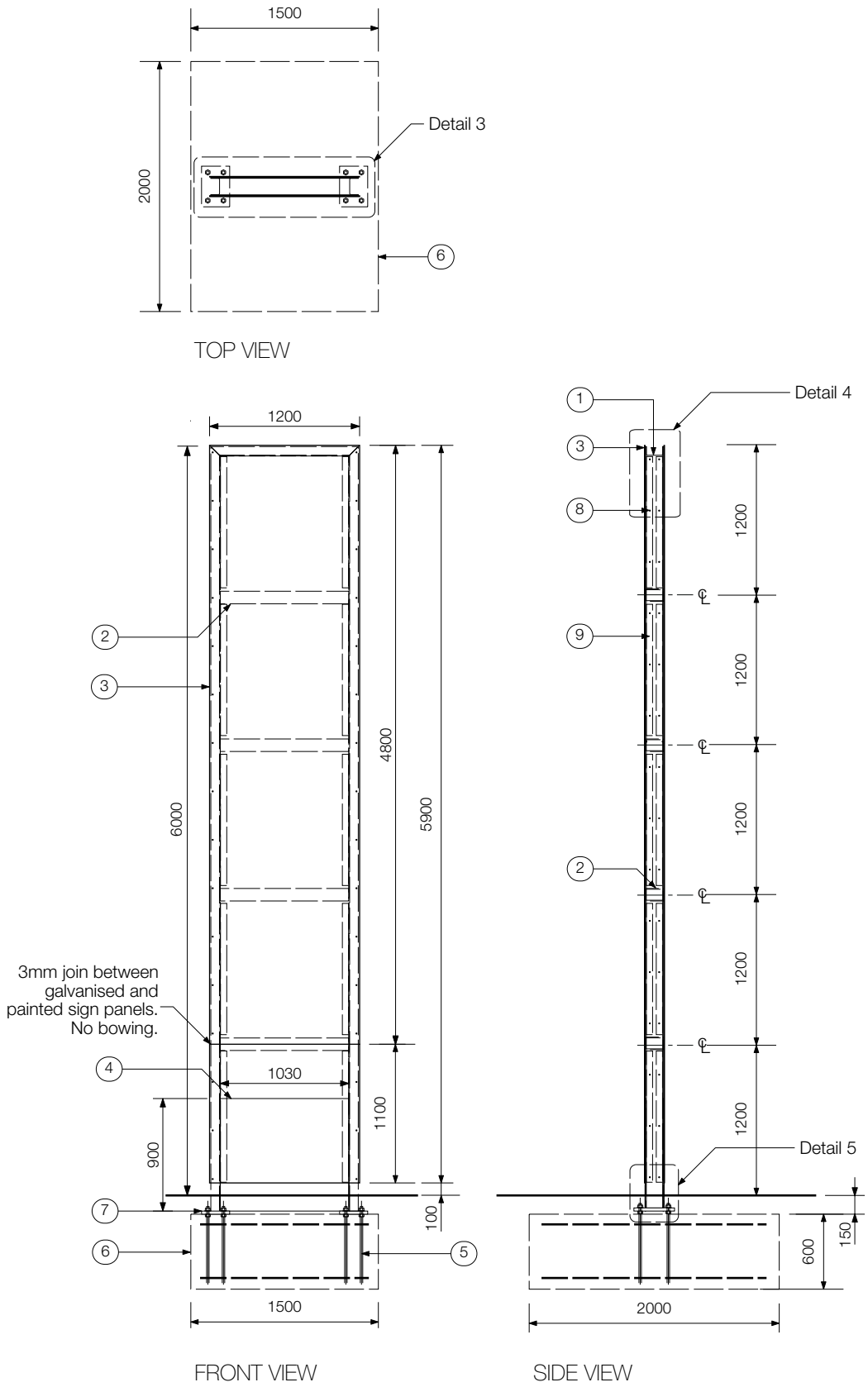

Construction Details

Scale 1:50

Construction Details

Unless otherwise noted all dimensions in millimetres. Use figured dimensions in preference to scaling. Contractor to confirm all dimensions and details on site prior to manufacture.

1. Sign frame, steel parallel flange channel (150 PFC) with mitre joins in corners.
2. Cross members, 150 x 100 x 6mm steel RHS, FSB welded to flange channel.
3. Sign panel, 6mm thick Aluminium. All edges of panel to have a 1mm radius fillet to facilitate the best paint coverage. Graphic elements mask & sprayed 2 pac paint.
4. Kickplate, 6mm steel plate continuous welded between uprights of sign frame. Visible welds ground smooth, no angle grind marks to be visible. It should appear as one piece of metal.
5. M20 Grade 4.6 galvanised steel caged footing bolts, with galvanised steel leveling nuts, set into concrete footing, minimum 500mm with 100mm cog at end of bolt.
6. Concrete pad footing. F82 mesh top and bottom.
7. 25mm thick steel base plate FSB welded to sign frame.
8. M6 stainless steel, security style, counter sunk socket cap machine screws, to fix sign panel to flange channel. At equal centres.
9. Aluminium angle, 50 x 50 x 6mm, welded to the back of the sign faces. Fastened to the sign frame as detailed.

Construction Details

Unless otherwise noted all dimensions in millimetres. Use figured dimensions in preference to scaling. Contractor to confirm all dimensions and details on site prior to manufacture.

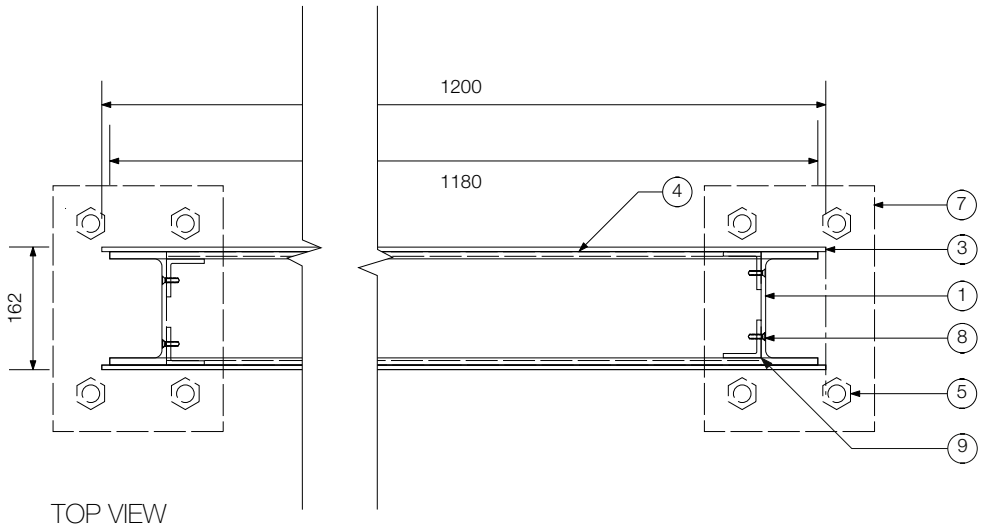

TOP VIEW

Detail 3

Scale 1:10

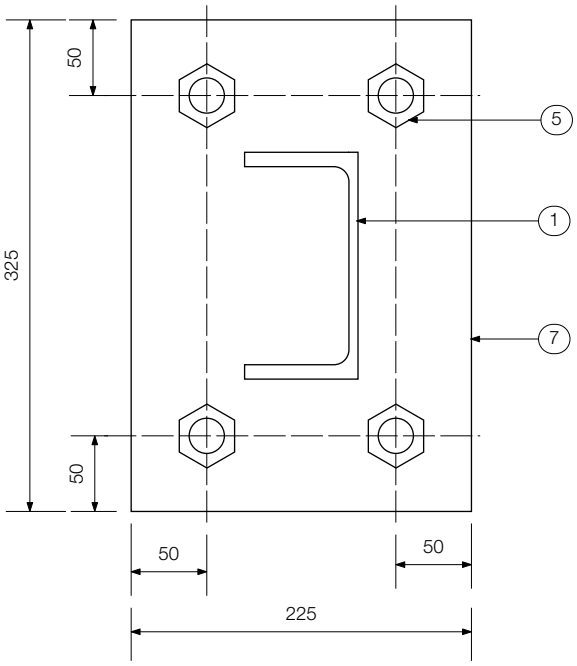

TOP VIEW

Base Plate Detail

Scale 1:5

Construction Details

Unless otherwise noted all dimensions in millimetres. Use figured dimensions in preference to scaling. Contractor to confirm all dimensions and details on site prior to manufacture.

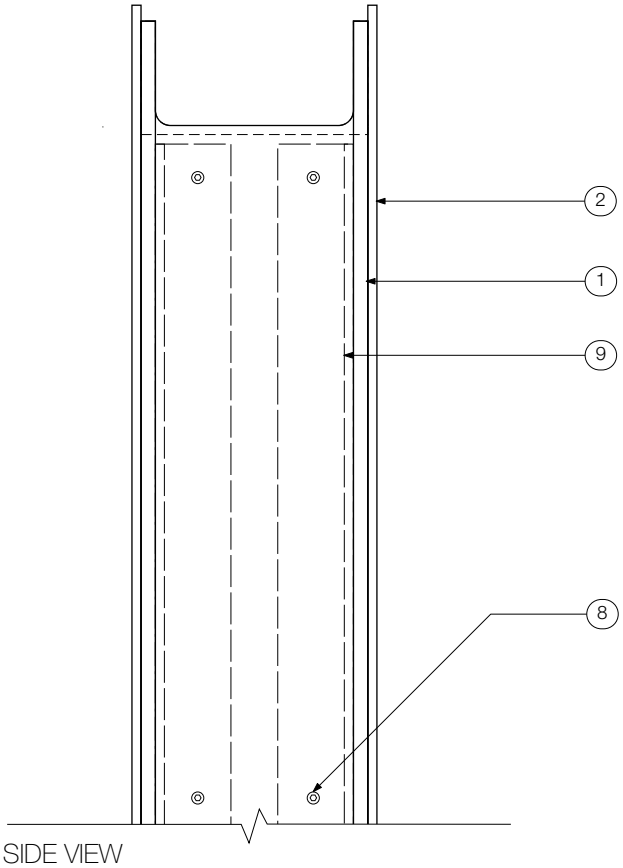

SIDE VIEW

Detail 4

Scale 1:5

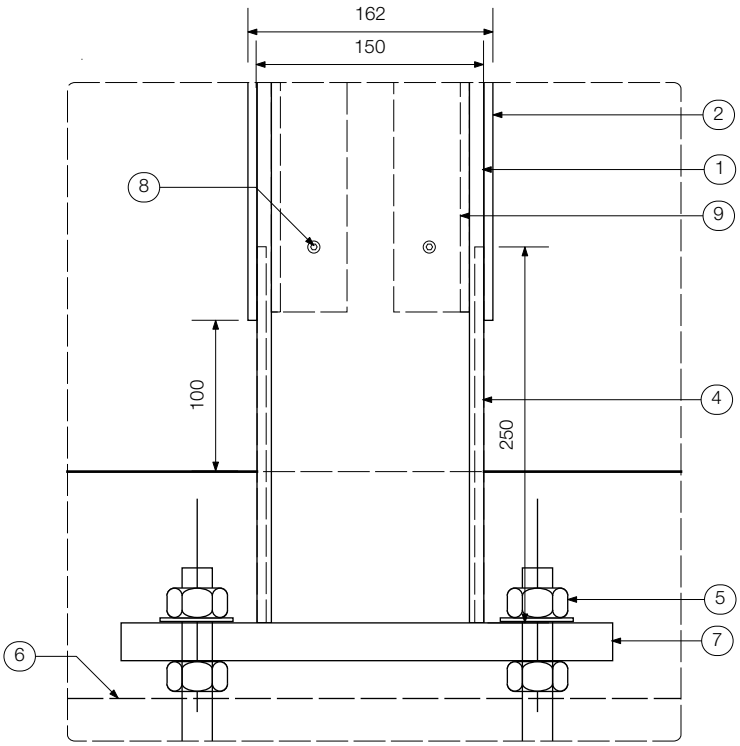

SIDE VIEW

Detail 5

Scale 1:5